Onan

Service Manual

RV GenSets

BF (Spec a-b)
BFA (Spec a-c)
NH (Spec j-p)
BGA (Spec a-c)

900-0337
1-83
Printed in U.S.A.

Safety Precautions

Before operating the generator set, read the Operator's Manual and become familiar with it and the equipment. **Safe and efficient operation can be achieved only if the unit is properly operated and maintained.** Many accidents are caused by failure to follow fundamental rules and precautions.

The following symbols, found throughout this manual, alert you to potentially dangerous conditions to the operator, service personnel, or the equipment.

⚠DANGER ***This symbol warns of immediate hazards which will result in severe personal injury or death.***

⚠WARNING ***This symbol refers to a hazard or unsafe practice which can result in severe personal injury or death.***

⚠CAUTION ***This symbol refers to a hazard or unsafe practice which can result in personal injury or product or property damage.***

FUEL AND FUMES ARE FLAMMABLE. Fire, explosion, and personal injury can result from improper practices.

- DO NOT fill fuel tanks while engine is running. Fuel contact with hot engine or exhaust is a potential fire hazard.
- DO NOT SMOKE OR USE AN OPEN FLAME near the generator set or fuel tank.
- Fuel lines must be adequately secured and free of leaks. Fuel connection at the engine should be made with an approved flexible, non–conductive line. Do not use copper piping on flexible lines as copper will work harden and become brittle.
- Be sure all fuel supplies have a positive shutoff valve.

GASOLINE AND LPG FUEL MAY BE ACCIDENTALLY IGNITED BY ELECTRICAL SPARKS, presenting the hazard of fire or explosion, which can result in severe personal injury or death. When installing the generator set:

- Do not tie electrical wiring to fuel lines.
- Do not run electrical lines and fuel lines through the same compartment openings.
- Keep electrical and fuel lines as far apart as possible.
- Place a physical barrier between fuel lines and electrical lines wherever possible.
- If electrical and fuel lines must pass through the same compartment opening, make certain that they are physically separated by running them through individual channels, or by passing each line through a separate piece of tubing.
- DO NOT SMOKE while servicing batteries. Lead acid batteries emit a highly explosive hydrogen gas that can be ignited by electrical arcing or by smoking.

EXHAUST GASES ARE DEADLY

- Never sleep in the vehicle with the generator set running unless vehicle is equipped with an operating carbon monoxide detector.
- Provide an adequate exhaust system to properly expel discharged gases. Inspect exhaust system daily for leaks per the maintenance schedule. Be sure that exhaust manifolds are secure and not warped. Do not use exhaust gases to heat a compartment.
- Be sure the unit is well ventilated.

MOVING PARTS CAN CAUSE SEVERE PERSONAL INJURY OR DEATH

- Before starting work on the generator set, disconnect batteries. This will prevent accidental arcing.
- Keep your hands away from moving parts.
- Make sure that fasteners on the generator set are secure. Tighten supports and clamps, keep guards in position over fans, drive belts, etc.
- Do not wear loose clothing or jewelry while working on generator sets. Loose clothing and jewelry can become caught in moving parts. Jewelry can short out electrical contacts and cause shock or burning.
- If adjustment must be made while the unit is running, use extreme caution around hot manifolds, moving parts, etc.

ELECTRICAL SHOCK CAN CAUSE SEVERE PERSONAL INJURY OR DEATH

- Disconnect starting battery before removing protective shields or touching electrical equipment. Use rubber insulative mats placed on dry wood platforms over floors that are metal or concrete when around electrical equipment. Do not wear damp clothing (particularly wet shoes) or allow skin surfaces to be damp when handling electrical equipment.
- Use extreme caution when working on electrical components. High voltages can cause injury or death.
- Follow all state and local electrical codes. Have all electrical installations performed by a qualified licensed electrician. Tag open switches to avoid accidental closure.
- DO NOT CONNECT GENERATOR SET DIRECTLY TO ANY BUILDING ELECTRICAL SYSTEM. Hazardous voltages can flow from the generator set into the utility line. This creates a potential for electrocution or property damage. Connect only through an approved device and after building main switch is open. Consult an electrician in regard to emergency power use.

GENERAL SAFETY PRECAUTIONS

- Have a fire extinguisher nearby. Maintain extinguisher properly and become familiar with its use. Extinguishers rated ABC by the NFPA are appropriate for all applications. Consult the local fire department for the correct type of extinguisher for various applications.
- Hot coolants under pressure can cause severe personal injury. DO NOT open a radiator pressure cap while the engine is running. Stop the engine and carefully bleed the system pressure.
- Benzene and lead, found in some gasoline, have been identified by some state and federal agencies as causing cancer or reproductive toxicity. When checking, draining or adding gasoline, take care not to ingest, breathe the fumes, or contact gasoline.
- Used engine oils have been identified by some state or federal agencies as causing cancer or reproductive toxicity. When checking or changing engine oil, take care not to ingest, breathe the fumes, or contact used oil.
- Remove all unnecessary grease and oil from the unit. Accumulated grease and oil can cause overheating and engine damage, which presents a potential fire hazard.
- DO NOT store anything in the generator compartment such as oil or gas cans, oily rags, chains, wooden blocks, portable propane cylinders, etc. A fire could result or the generator set operation (cooling, noise and vibration) may be adversely affected. Keep the compartment floor clean and dry.
- Do not work on this equipment when mentally or physically fatigued, or after consuming any alcohol or drug that makes the operation of equipment unsafe.

Table of Contents

TITLE	PAGE
SAFETY PRECAUTIONS	Inside Cover
INTRODUCTION	2
About this Manual	2
Model Identification	2
SPECIFICATIONS	3
DIMENSIONS AND CLEARANCES	4
TORQUE SPECIFICATIONS	7
PREPARING TO SERVICE	8
Troubleshooting	8
Special Tools	8
Safety Considerations	8
Set Removal	9
ENGINE-PRIMARY SYSTEMS	10
General	10
Engine Troubleshooting Guide	10
Exhaust System	11
Cooling System	13
Fuel System,	14
Ignition System	24
Crankcase Ventilation System	26
CONTROL	28
General	28
Operation Description for BF and NH (Spec J) Control	28
Troubleshooting the BF and NH (Spec J) Control	29
Operation Description for BFA, BGA, and NH (Spec K-P) Control	35
Troubleshooting the BFA, BGA, and NH (Spec K-P) Control	36
GENERATOR	41
Generator Troubleshooting	41
Generator Disassembly	41
Generator Service Procedures	43
Generator Assembly	47
Load Wire Connections	48
ENGINE-BLOCK ASSEMBLY	49
General	49
Oil Filter and Adapter	49
Cylinder Heads	49
Valve System	50
Gear Cover	53
Governor Cup	54
Timing Gears and Camshaft	54
Lubrication System	54
Piston Assembly	55
Crankshaft	59
Cylinder Block	60
Bearings	61
Oil Seals	61
SERVICE CHECKLIST	63
Mounting	63
Lubrication	63
Wiring	63
Initial Start Adjustments	63
Output Check	63
Exhaust System	63
Fuel System	64
Control	64
Mechanical	64

Introduction

ABOUT THIS MANUAL

This manual provides service information for Onan B and N series recreational vehicle generator sets. This is a complete service manual for the experienced serviceperson covering troubleshooting, disassembly, repair, reassembly, and adjustments for the engine, generator, and control. It is recommended that the serviceperson be thoroughly familiar with the principles of gasoline engine operation and have a basic knowledge of electrical fundamentals. Other Onan publications such as Electrical/Mechanical Fundamentals (932-0408), Onan Generator Training Manual (932-0404), and Electric Generating Set Training Manual For Recreational Vehicles (932-0402) are recommended as additional sources of information.

Read all service procedures completely before beginning any repair work and observe all cautions and warnings. It is extremely important that the generator set installation maintain compliance with applicable codes and standards for RV installations (see Installation Guide). The most critical areas of concern include the exhaust system, fuel system, electrical wiring, compartment construction, and ventilation system. Improper servicing can create an unsafe installation that might result in damage to the vehicle and equipment or might cause serious personal injury or death to the user.

MODEL IDENTIFICATION

When contacting an Onan Dealer or Distributor, always supply the complete Model No. and Serial No. as shown on the set nameplate. This information is necessary to identify your set when ordering replacement parts.

Always use genuine Onan replacement parts obtained from an authorized Onan Dealer or Distributor. Universal replacement type parts (usually intended for automotive use) often look similar but might not perform to Onan specifications. Only genuine Onan replacement parts are designed and tested for the application to ensure reliable service and dependable operation.

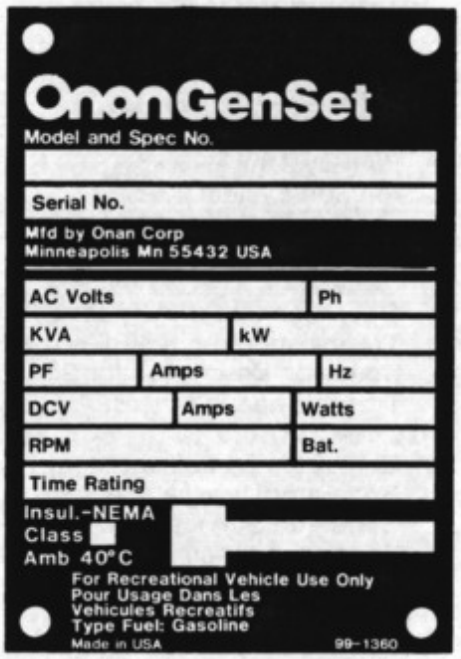

ONAN NAMEPLATE

WARNING

INCORRECT SERVICE OR REPLACEMENT OF PARTS MIGHT RESULT IN SEVERE PERSONAL INJURY AND/OR EQUIPMENT DAMAGE. SERVICE PERSONNEL MUST BE QUALIFIED TO PERFORM ELECTRICAL AND/OR MECHANICAL SERVICE.

Specifications

MODELS	BF (Spec A-B)	BFA (Spec A-C)	BGA (Spec A-C)	NH (Spec J-P)
GENERAL				
Engine Design	Four Cycle, Air Cooled, Two Cylinder			
Generator Design	Revolving Armature, Four Pole			
Output Ratings	Unity Power Factor			
Starting System	Exciter Cranked, 12 volts			
Engine Speed	1800 r/min			
Weight	217 lbs (99 Kg)	235 lbs (107 Kg)	285 lbs (129 Kg)	305 lbs (138 Kg)
ENGINE DETAILS				
Horsepower	8.5	8.5	10	14.0
Displacement	40.25 in^3 (700 cm^3)	43.3 in^3 (710 cm^3)	47.4 in^3 (782 cm^3)	60.0 in^3 (984 cm^3)
Compression Ratio	7:1	7:1	6.9:1	7.1
Bore	3.125 in (79.38 mm)	3.25 in (82.55 mm)	3.25 in (82.55 mm)	3.56 in (90.42 mm)
Stroke	2.625 in (66.68 mm)	2.625 in (66.68 mm)	2.87 in (72.90 mm)	3.0 in (76.20)
Oil Capacity (with filter)	4 qts (3.8 L)	3.5 qts (3.3 L)	3.5 qts (3.3 L)	3.5 qts (3.3 L)
Fuel	Lead-Free Or Regular Grade Gasoline			
Ventilation	80 in^2 (516 cm^2)	80 in^2 (516 cm^2)	100 in^2 (645 cm^2)	120 in^2 (774 cm^2)
GENERATOR DETAILS				
Watts	4,000	4,000	5,000	6,500
Volts	120/240	120	120/240	120/240
Amps At 120 Volts	33.3	33.3	41.6	54.2
Frequency (Hertz)	60	60	60	60
Phase	Single	Single	Single	Single
Wires	4	2	4	4
Battery Charge Rate	1-1.5 Amps	1-1.5 Amps	1-1.5 Amps	1-1.5 Amps
TUNE UP SPECS				
Spark Plug Gap	0.025 in (0.64 mm)	0.025 in (0.64 mm)	0.025 in (0.64 mm)	0.025 in (0.64 mm)
Ignition Points	0.25 in (0.64 mm)	0.021 in (0.53 mm)	0.021 in (0.53 mm)	0.020 in (0.51 mm)
Ignition Timing (cold)	21°-25° BTC	21° BTC	21° BTC	21° BTC
Valve Lash (cold)				
Intake	0.005 in (0.127 mm)	0.005 in (0.127 mm)	0.005 in (0.127 mm)	0.005 in (0.127 mm)
Exhaust	0.013 in (0.330 mm)	0.013 in (0.330 mm)	0.013 in (0.330 mm)	0.013 in (0.330 mm)

Dimensions And Clearances

Dimensions not in parentheses are INCHES.

MODELS	BF (Spec A-B)	BFA (Spec A-C)	BGA (Spec A-C)	NH (Spec J-P)
CYLINDERS AND PISTON ASSEMBLY				
Cylinder Bore (std size honed)	3.1245-3.1255 (79.362-79.388mm)	3.2490-3.2500 (82.525-82.550mm)		3.5625-3.5635 (90.488-90.513mm)
Cylinder Taper (Max)	0.005 (0.127mm)			
Cylinder Out Of Round (Max)	0.002 (0.051mm)			
Piston Diameter	3.122-3.123 (79.31-79.34mm)	3.243-3.244 (82.37-82.40mm)		3.5600-3.5610 (90.424-90.449mm)
Clearance In Cylinder	0.001-0.003 (.025-.080mm)	0.004-0.006 (0.10-0.15mm)		0.0015-0.0035 (0.038-0.089mm)
Ring Gap	0.0100-0.0200 (0.254-0.508mm)			
Piston Ring #1 (top) Groove Width	0.080-0.081 (2.03-2.06mm)			0.0955-0.0965 (2.426-2.451mm)
Piston Ring #2 Groove Width	0.080-0.081 (2.03-2.06mm)			0.0955-0.0965 (2.426-2.451mm)
Piston Ring #3 Groove Width	0.188-0.189 (4.78-4.80mm)			0.1880-0.1890 (4.775-4.800mm)
Piston Ring #1 (top) Side Clearance	0.002-0.008 (0.051-0.203mm)			
Piston Pin Diameter	0.687-0.688 (17.46-17.47mm)			0.7500-0.7502 (19.050-19.055mm)
Piston Pin Fit In Rod	0.0002-0.0007 (0.005-0.018mm)			
Connecting Rod Side Clearance	0.0020-0.0160 (0.051-0.406mm)			
Connecting Rod Bearing Clearance	0.0020-0.0033 (0.051-0.084mm)			0.0005-0.0023 (0.013-0.058mm)

MODELS	BF (Spec A-B)	BFA (Spec A-C)	BGA (Spec A-C)	NH (Spec J-P)
CRANKSHAFT AND CAMSHAFT				
Crankshaft Main Bearing Journal Diameter	1.9992-2.0000 (50.780-50.800mm)			
Crankshaft Rod Journal Bearing Diameter	1.6252-1.6260 (41.280-41.300mm)			
Crankshaft Main Bearing Diameter (Assembled)	2.0015-2.0040 (50.838-50.902mm)			
Crankshaft Main Bearing Clearance	0.0025-0.0038 (0.064-0.097mm)			
Crankshaft End Play	0.006-0.012 (0.15-0.30mm)			0.0050-0.0090 (0.127-0.229mm)
Camshaft Journal Diameter	1.3740-1.3745 (34.900-34.912mm)			
Camshaft Bearing Diameter (Assembled)	1.3757-1.3787 (34.943-35.019mm)			
Camshaft Bearing Clearance	0.0015-0.0030 (0.038-0.076mm)			
Camshaft End Play	0.003 Min. (0.08mm Min.)			0.0030-0.0120 (0.076-0.305mm)
Camshaft Lift	0.300 (7.62mm)			
VALVES AND LIFTERS				
Valve Spring Free Length (Int and Exh)	1.6620 (42.214mm)			
Valve Spring Compressed Length (Int and Exh)	1.3750 (34.925mm)			
Valve Spring Tension Open (Int and Exh)	71-79 lbs (9.8-10.9N)			
Valve Spring Tension Closed (Int and Exh)	38-42 lbs (5.25-5.8N)			
Valve Face Angle (Int and Exh)	44°			
Valve Seat Angle (Int and Exh)	45°			

MODELS	BF (Spec A-B)	BFA (Spec A-C)	BGA (Spec A-C)	NH (Spec J-P)
Valve Seat Width (Int and Exh)	0.031-0.047 (0.8-1.2mm)			
Valve Stem Diameter (Int)	0.3425-0.3430 (8.700-8.712mm)			
Valve Stem Diameter (Exh)		0.3410-0.3415 (8.661-8.674mm)		0.3410-0.3420 (8.661-8.687mm)
Valve Guide Diameter (Int and Exh)	0.3440-0.3460 (8.738-8.788mm)			
Valve Stem Clearance (Int)	0.0010-0.0025 (0.025-0.064mm)			
Valve Stem Clearance (Exh)		0.002-0.004 (0.06-0.10mm)		0.0025 (0.0635mm)
Valve Lifter Diameter	0.7475-0.7480 (18.987-19.000mm)			
Valve Lifter Bore Diameter	0.7500-0.7515 (19.050-19.088mm)			
Valve Seat Diameter (Int)		1.443-1.444 (36.652-36.678mm)		1.5690-1.5700 (39.853-39.878mm)
Valve Seat Diameter (Exh)		1.192-1.193 (30.28-30.30mm)		1.2550-1.2560 (31.877-31.902mm)
Valve Seat Bore Diameter (Int)		1.4395-1.4405 (36.5633-36.5887mm)		1.5645-1.5655 (39.738-39.784mm)
Valve Seat Bore Diameter (Exh)		1.189-1.190 (30.20-30.23mm)		1.2510-1.2520 (31.775-31.800mm)

Torque Specifications

MODELS	BF (Spec A-B)	BFA (Spec A-C)	BGA (Spec A-C)	NH (Spec J-P)
TORQUE SPECIFICATIONS FT-LBS/(N•m)	Use engine oil as a lubricant for all threads EXCEPT the spark plug and armature thru-stud threads.			
Cylinder Head (Cold)	16-18 (22-24 N•m)			17-19 (23-26 N•m)
Connecting Rod	12-14 (16-19 N•m)			27-29 (37-39 N•m)
Rear Bearing Plate	25-27 (34-37 N•m)			25-28 (34-38 N•m)
Flywheel To Crankshaft	35-40 (47-54 N•m)			
Oil Base	18-23 (24-31 N•m)			
Oil Pump	7-9 (9-12 N•m)			
Gearcase Cover	8-10 (11-14 N•m)			
Spark Plug	15-20 (20-27 N•m)			15-20 (1) (20-27 N•m)
Exhaust Manifold	9-11 (12-15 N•m)			20-23 (27-30 N•m)
Intake Manifold	6-10 (8-14 N•m)			20-23 (27-30 N•m)
Armature Thru-Stud Nut	45-50 (61-68 N•m)			
Generator Thru-Bolts	15-18 (20-24 N•m)			

(1) - Use 7-9 Ft-Lbs (9-12 N•m) with tapered plug seat.

Preparing To Service

TROUBLESHOOTING

Before starting to service the generator set, follow a systematic troubleshooting procedure to locate and isolate the problem. For servicing purposes, the generator set can be divided into the following:

- Engine - Primary Systems
- Control
- Generator
- Engine - Block Assembly

A separate section is contained in this manual that covers each area.

Several troubleshooting guides are included in this manual to help the serviceperson locate the cause of various malfunctions. It should be noted that some malfunctions might have several possible causes. For this reason, the serviceperson may have to investigate several likely problem areas in order to isolate the source of the malfunction. Because of the complexity of the product, a troubleshooting chart cannot list every malfunction and the cause. In some situations, the serviceperson will have to rely on experience and a knowledge of the product to locate the problem and service as required.

SPECIAL TOOLS

The following special tools may be needed depending on the service required. Some of these tools may be purchased from Onan while others may be purchased from outside suppliers. A complete listing of the tools available from Onan is contained in the Tool Catalog (900-0019) which is available from Onan Dealers or Distributors.

Engine Tools

Torque wrench (0-175 Ft-Lbs or 0-240 N•m)
Feeler gauge
Pressure gauge
Spark plug gap gauge
Carburetor adjustment wrench
Points adjustment tool
Flywheel puller
Snap ring pliers
Gear puller with puller ring
Cylinder ridge reamer
Combination main and cam bearing remover
Combination main and cam bearing driver
Oil seal loader and driver
Piston ring compressor
Piston ring spreader
Cylinder Hone
Valve seat cutter
Valve spring compressor
Valve lock replacer
Valve seat driver
Valve guide driver
Piston groove cleaner
Outside micrometer set (0 to 4 in.)
Telescoping gauge set (1/2 in. to 6 in.)
Hole gauge (0.300 in. to 0.400 in.)
Plasti-Gage bearing clearance guide

Generator And Control

Lead or dead-blow hammer
Battery hydrometer
VOM multi-tester
Megger (500 to 1,000 volts)
Armature growler
Load test panel
Jumper wires

SAFETY CONSIDERATIONS

Always consider the safety aspects of any service procedure. Generator sets present several hazards that the serviceperson must be aware of if the job is to be completed safely. Read through the safety precautions listed on the inside cover to familiarize yourself with the hazards that exist. Once the hazards are known, approach the job with a safety conscious attitude. Being safety conscious is the most effective way to avoid injury to yourself or others. Reduce the chance that an accident will occur by adopting the following safeguards.

- **Use Personal Protection-** When the situation calls for it, protect your body by wearing the appropriate safety equipment. Protective clothing includes such items as safety shoes, gloves, safety glasses, and hard hats. Leave rings and jewelry off and don't wear loose clothing that might get caught on equipment.
- **Work to Reduce The Hazard-** The workshop area and all pieces of equipment used can contribute to reducing the hazard potential. Keep guards and shields in place on machinery and maintain equipment in good working condition. Store flammable liquids in approved containers away from open flame. Keep the workshop clean and well-lighted, and provide adequate ventilation. Keep fire extinguishers and safety equipment nearby and be prepared to respond to an emergency.

- **Develop Safe Work Habits-** Unsafe actions are identified as the cause of most accidents involving the use of tools and machines. Be familiar with the equipment and know how to use it safely. Use the correct tool for the job and check its condition before starting. Observe the warnings and cautions in this manual and take special precautions when working around electrical equipment. Don't work alone if possible and don't take risks.

Be prepared if an accident does occur. Numerous agencies such as the Red Cross and your local police and fire departments offer basic courses in first aid, mouth-to-mouth resuscitation, and fire control. Take advantage of these offerings so you are ready to respond when an accident happens. Learn to be Safety-Conscious and make safe practices a part of your work routine.

SET REMOVAL

Some service procedures will require that the generator set be removed from the coach. Because of the wide variety of generator set installations, it is impossible to specify the exact removal procedures for each generator set. Depending on the manufacturer, the set might be removable through the side, back, or bottom of the coach. Contact the coach manufacturer to obtain their recommendations before attempting to remove the set from the coach. Use adequate lifting devices and provide sufficient support for the generator set. Keep hands and feet clear during lifting.

Once a satisfactory method for removing the generator set has been determined, disconnect the items listed. Refer to Figure 1 for a typical installation.

- Disconnect the ***vehicle*** negative (−) battery cable at the battery terminal.
- Disconnect the ***generator set*** negative (−) battery cable at the battery terminal and at the generator set.
- Remove the control box cover and disconnect: (A) Positive battery cable from start solenoid. (B) Load wires from terminal block. Tag all load wires to provide positive identification when reconnecting.
- Pull the battery cable and load wires from the control box.
- Disconnect the remote control wiring from the remote terminal block within the control (or disconnect remote control wire plug if applicable).
- Disconnect fuel line at the fuel pump. Securely plug the end of the fuel line to prevent fuel leakage or an accumulation of explosive gasoline vapor.
- Remove the exhaust heat shield (if used) and disconnect the exhaust pipe from the exhaust manifold. (Some models have a flange connection while other models have clamp connection.)

When the items listed in the preceding paragraphs have been disconnected, examine the generator set mounting system. Locate all mounting bolts and supporting members for the set. In most installations, the generator set drip tray is bolted to the coach. Provide adequate support for the generator set before loosening any of the mounting bolts or support members. Remove the generator set as advised by the coach manufacturer. It should be noted that on some models, the air discharge opening extends through the compartment floor.

Once the generator set is removed, support it by placing blocks or other suitable supports under the drip tray. Do not allow the generator set to rest on the air discharge opening.

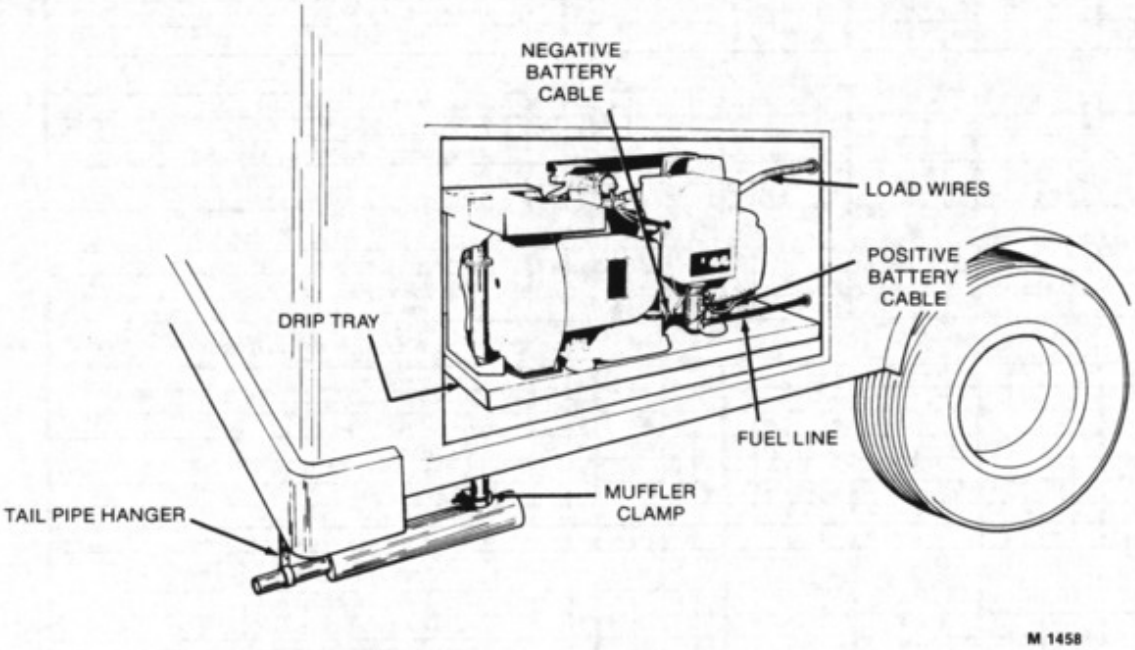

FIGURE 1. TYPICAL RV GENERATOR SET INSTALLATION

Engine — Primary Systems

GENERAL

The primary engine systems include the Exhaust, Cooling, Fuel, Ignition, and Crankcase Ventilation systems. These systems can often be serviced without removing the generator set from the coach. A trouble-shooting guide is provided to assist the serviceperson in determining the cause of various engine related malfunctions.

GASOLINE ENGINE TROUBLESHOOTING GUIDE

TROUBLE / CAUSE	Backfire at Carburetor	Bearing Wear	Black Exhaust	Blue Exhaust	Burned Valves	Connecting Rod Wear	Cranks Slowly	Cylinder Wear	Engine Stops	Failure to Start	Governor Hunting	High Oil Pressure	Low Oil Pressure	Loss of Coolant (Water Cooled)	Mechanical Knocks	Misfiring	Overheating (Air Cooled)	Overheating (Water Cooled)	Piston Wear	Poor Compression	Ring Wear	Sticking Valves
STARTING SYSTEM																						
Loose or Corroded Battery Connection							•			•												
Low or Discharged Battery							•			•												
Faulty Starter							•			•												
Faulty Start Solenoid										•												
IGNITION SYSTEM																						
Ignition Timing Wrong	•				•					•			•	•	•	•						
Wrong Spark Plug Gap										•			•	•								
Worn Points or Improper Gap Setting									•	•				•								
Bad Ignition Coil or Condenser										•				•								
Faulty Spark Plug Wires										•				•								
FUEL SYSTEM									•	•												
Out of Fuel - Check																						
Lean Fuel Mixture - Readjust					•					•	•			•			•	•				
Rich Fuel Mixture or Choke Stuck	•		•							•				•	•							
Engine Flooded	•		•						•	•												
Poor Quality Fuel	•		•		•					•				•	•							
Dirty Carburetor	•								•	•	•				•							
Dirty Air Cleaner	•	•	•					•		•					•				•		•	
Dirty Fuel Filter										•	•				•							
Defective Fuel Pump									•	•	•				•							
INTERNAL ENGINE																						
Wrong Valve Clearance					•					•				•	•				•			
Broken Valve Spring					•					•				•	•				•		•	
Valve or Valve Seal Leaking				•	•						•				•				•			
Piston Rings Worn or Broken				•						•				•					•			
Wrong Bearing Clearance		•				•	•					•		•								
COOLING SYSTEM (AIR COOLED)																						
Poor Air Circulation													•	•								
Dirty or Oily Cooling Fins													•	•								
Blown Head Gasket									•	•			•						•			
LUBRICATION SYSTEM																						
Defective Oil Gauge											•	•										
Relief Valve Stuck											•	•										
Faulty Oil Pump		•			•		•				•		•					•		•		
Dirty Oil or Filter		•			•		•											•		•	•	
Oil Too Light or Diluted		•		•	•		•				•		•		•	•	•			•		
Oil Level Low		•			•		•				•		•		•	•	•			•		
Oil Too Heavy						•						•										
Dirty Crankcase Breather Valve		•		•								•										
THROTTLE AND GOVERNOR																						
Linkage Out of Adjustment										•	•											
Linkage Worn or Disconnected											•											
Governor Spring Sensitivity Too Great											•											
Linkage Binding											•											

EXHAUST SYSTEM

The condition of the exhaust system is extremely critical on RV generator sets because of the possibility of exhaust gases entering the coach.

The exhaust system must be serviced immediately if inspection reveals leaking joints or connections, loose fasteners, or broken or damaged components.

Always replace worn components with new original equipment replacement parts. Do not attempt to repair a broken exhaust pipe or manifold by welding and do not replace worn out components with parts that do not meet factory specifications.

WARNING ***Inhalation of exhaust gases might result in serious personal injury or death. Modifying the exhaust system (other than shortening the downpipe) might allow poisonous exhaust gases to enter the coach. Use only original equipment replacement parts when servicing the exhaust system. Unauthorized modifications will also void the warranty and cancel the UL Listing/CSA Certification. Liability for injury or damages due to unauthorized modifications becomes the responsibility of the person making the change.***

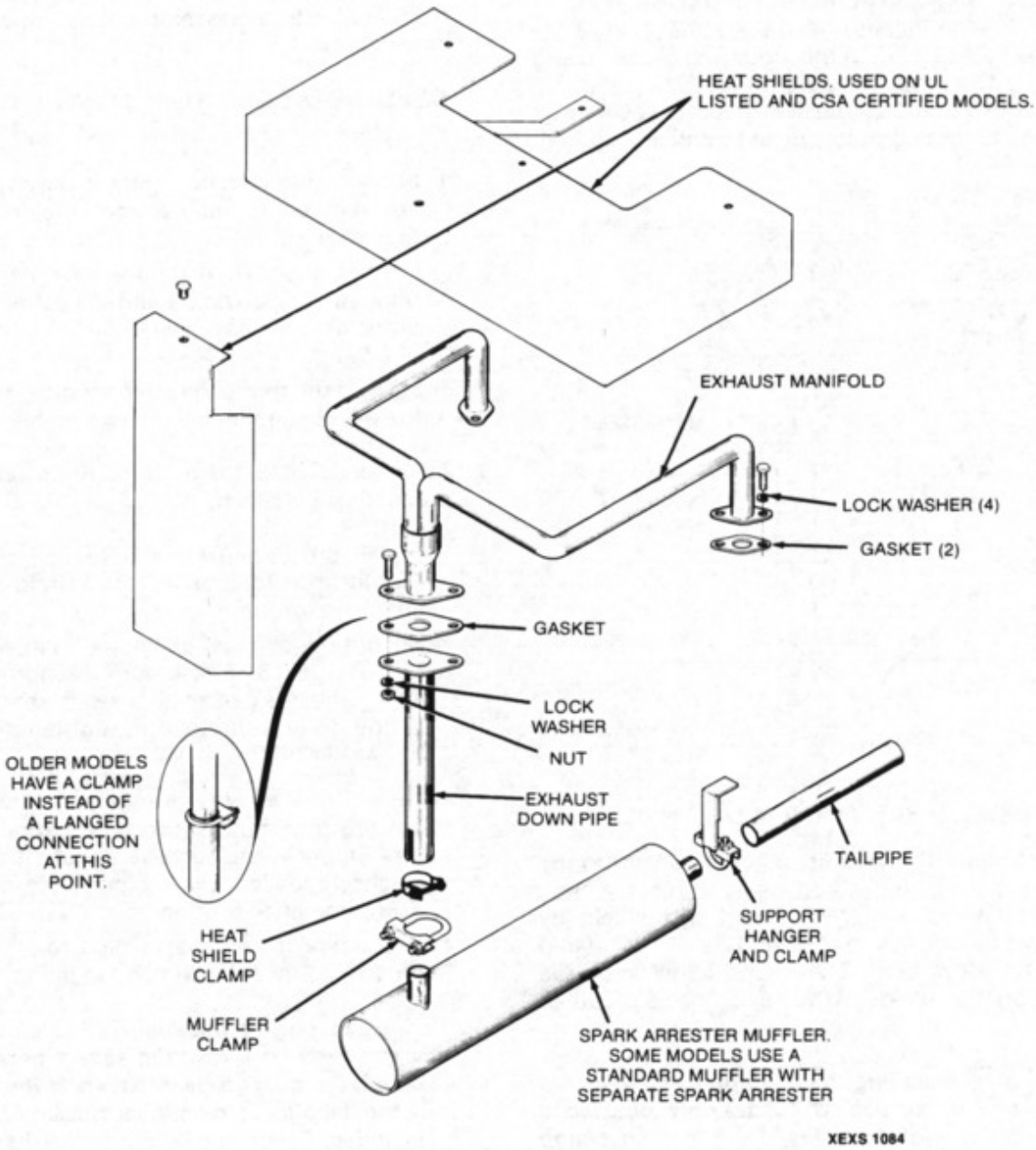

FIGURE 2. EXHAUST SYSTEM

Heat Shields (UL/CSA)

The exhaust shields must be properly installed to maintain compartment temperatures within the limits specified by the following regulations:

ANSI/RVIA-EGS-1-1976
UL Subject 1248
CSA Bulletin #946

Follow the disassembly and reassembly recommendations to avoid damage and ensure safe operation.

Disassembly: Remove the 1/4 inch locking head bolt that secures the top of the downpipe shield to the exhaust manifold shield. Remove the downpipe shield by pulling it upward and outward until the tab (see Figure 3) is disengaged from the clamp screw. Remove the three 1/4 inch locking head bolts that secure the exhaust manifold shield to the mounting brackets and scroll and lift off the manifold shield. The manifold shield mounting brackets and heat shield clamp may be left attached unless complete disassembly is required.

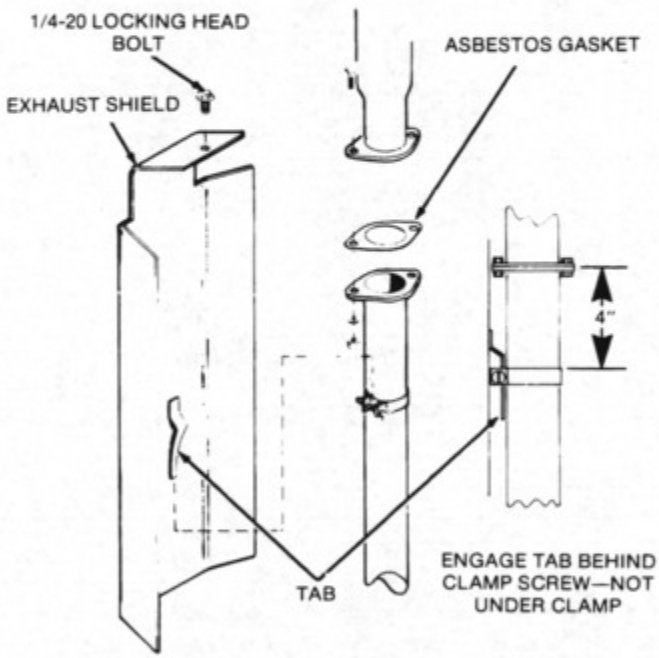

FIGURE 3. EXHAUST SHIELD TAB ENGAGEMENT

Assembly: Secure the exhaust manifold shield to the mounting brackets and scroll using three 1/4 inch locking head bolts. Install the downpipe shield by engaging the tab (on inside of shield) behind the clamp screw on the downpipe. The clamp screw must be positioned on the outside of the downpipe as shown in Figure 3.

CAUTION ***Installing the downpipe shield clamp incorrectly will cause downpipe tab to break off due to vibration. Place tab behind clamp screw and not under clamp.***

Secure the top of the shield by installing the top 1/4 inch locking bolt in the exhaust manifold shield. If the downpipe shield is loose, adjust the clamp higher up on the downpipe as shown in Figure 3 and tighten securely. Recheck and tighten any loose bolts.

WARNING ***To prevent overheating of compartment walls and the possibility of fire, all exhaust shielding supplied with unit must be properly installed.***

Exhaust Pipe And Muffler

The exhaust system consists of the exhaust manifold, exhaust downpipe, muffler, spark arrester, and tailpipe. Older models might have a separate spark arrester. However, on most models, the spark arrester will be integral with the muffler. When service is necessary, disassemble and reassemble as specified in the following sections.

Disassembly: Remove heat shields as described in the previous section and then proceed as indicated.

1. Loosen muffler clamp and support hanger clamp(s) and remove the muffler and tailpipe assembly (see Figure 2).
2. Loosen the exhaust downpipe flange bolts and remove the downpipe and asbestos flange gasket. Some models may have a clamp connection instead of a flange.
3. Loosen the four exhaust manifold bolts and remove the exhaust manifold and two manifold gaskets.

Assembly: Obtain the required replacement parts and proceed as indicated.

1. Install the exhaust manifold using new gaskets. Tighten the four exhaust manifold screws to the specified torque.
2. Secure the exhaust downpipe to the exhaust manifold using 5/16-18 bolts, lock washers, and nuts. Use a new abestos gasket between the exhaust manifold flanges to prevent leaks and tighten securely. Do not use sealer on the gasket.
3. Attach the inlet of the muffler to the downpipe using a 1-5/8 inch automotive type U-bolt clamp ONLY (see Figure 4) and tighten securely. If downpipe must be shortened, cut two 1/2 inch slots in the end of the downpipe after shortening.
4. If replacing the original tailpipe, refer to the following guidelines for selecting and locating the tailpipe.

WARNING ***Inhalation of exhaust gases might result in severe personal injury or death. Exhaust gases might enter the coach interior if the tailpipe is damaged, missing, or improperly installed. Follow the recommended exhaust system replacement procedures to ensure safe operation.***

- Use 1-3/8 inch ID, 18 gauge, rigid steel tubing for tailpipe. Do not use flexible exhaust tailpipe since it might break due to road shock and vibration.
- Use 1-1/2 inch U-bolt type automotive muffler clamps and shock mounted hangers for attaching and supporting the muffler and tailpipe. Only approved SAE automotive muffler clamps are acceptable for fastening the exhaust tailpipe to the muffler.
- Install exhaust tailpipe at least 1-1/2 inches away from the fuel tank and any combustible material. If 1-1/2 inches clearance cannot be maintained, install suitable heat shielding between tailpipe and combustible material or fuel tank to prevent excessive heating.

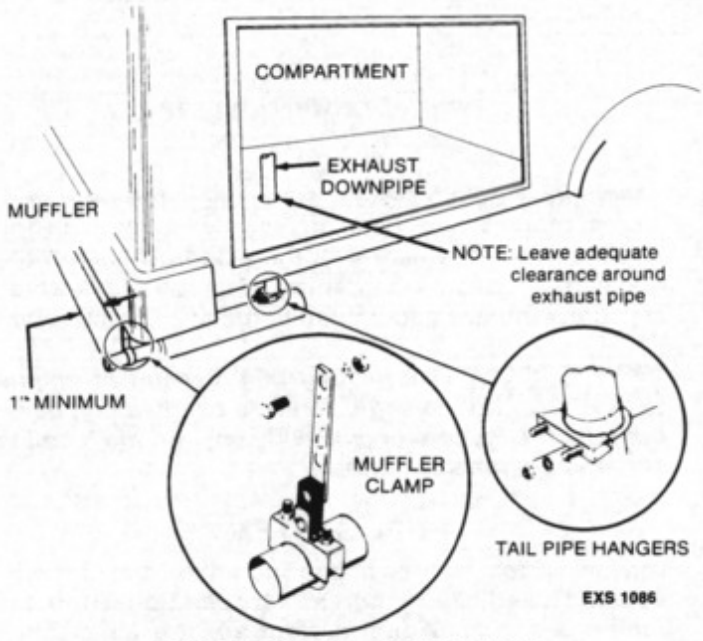

FIGURE 4. MUFFLER INSTALLATION

- Do ***not*** terminate the exhaust tailpipe:

  a. Under a window, door, or any opening that might allow exhaust gases to enter the coach interior.

  b. Ahead of or under the generator compartment air intake to prevent recirculation of exhaust gases. Terminate tailpipe to the ***rear*** of the compartment air intake.

  c. Under the fuel tank fill spout to prevent spilled fuel from being ignited by a hot tailpipe.

  d. Under the vehicle to prevent exhaust gases from entering the coach interior through small openings in the underside of the vehicle.

- Extend the tailpipe at least ***one inch*** (25mm) beyond the perimeter of the vehicle. Direct exhaust gases ***down*** and ***away*** from the vehicle and ***away*** from windows, doors, or compartment openings.
- Do not connect the generator set exhaust tailpipe to the vehicle exhaust system. Exhaust gases will be forced into the non-running engine and might be released through the carburetor air inlet. Water vapor from the exhaust might also damage the non-running engine.

5. Attach the tailpipe to the outlet end of the muffler and provide support using a shock mounted support hanger with clamp (see Figure 4).

CAUTION ***To prevent excessive vibration transfer to the vehicle, mount muffler and tailpipe hanger brackets directly above the component being supported and NOT at an angle.***

6. Run the generator set for five minutes and check entire exhaust system (visually and audibly) for leaks or excessive noise.
7. Clean spark arrester muffler every 100 hours of operation. Remove 1/8 inch pipe plug in bottom of muffler and run set for five minutes. Then replace pipe plug. Inspect exhaust system (visually and audibly) for leaks daily (at least every eight hours of running time).

COOLING SYSTEM

A constant airflow is critical for engine and generator cooling to prevent excessive heat build-up. All B and N series generator sets use a Vacu-Flo cooling system to provide the required airflow. With Vacu-Flo cooling, a flywheel fan draws cool air in from the generator end of the compartment (see Figure 5). The cool air passes over the cooling fins on the engine and absorbs the heat. The heated air is then discharged through the opening in the bottom of the vacu-flo scroll.

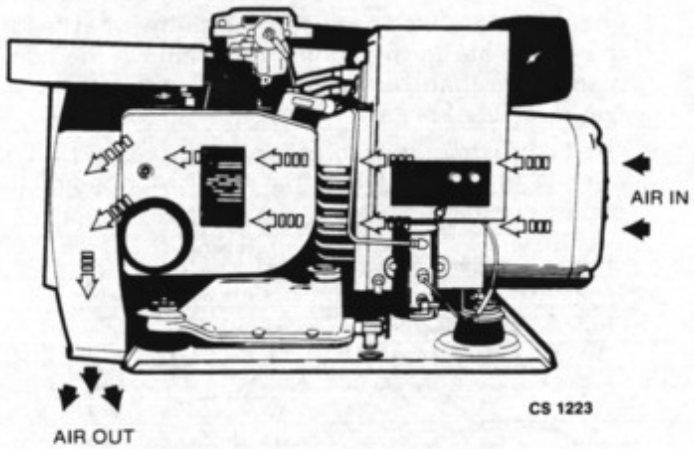

FIGURE 5. COOLING AIR FLOW

CAUTION ***Discharged cooling air might contain poisonous exhaust gases. Never use discharged cooling air for heating the coach interior.***

The generator compartment air inlet is sized (see SPECIFICATIONS) to allow the required flow rate of air. The air inlet opening and the air discharge opening must be kept free of any obstructions to avoid restricting airflow. Dirt, dust, or other debris that may clog the air duct openings should be removed during periodic maintenance. Dirt might also become lodged between the cooling fins on the engine block and cylinder heads. If this happens, heat transfer is greatly reduced and overheating can occur if the fins are not cleaned.

The cooling system consists of the left and right cylinder air housings, scroll, flywheel, and scroll backplate. When service is necessary, disassemble and assemble as specified in the following sections.

Disassembly: Remove the heat shields, exhaust downpipe, and exhaust manifold as described in the Exhaust System section and then proceed as indicated.

1. Remove the rubber air seal from around the oil filter (see Figure 6).
2. Loosen the 1/4 inch hex head cap screws that secure the left and right air housings to the cylinder heads and remove the air housings.
3. Loosen the 1/4 inch hex head cap screws that secure the scroll to the backplate and remove the scroll.

Do not remove the guard screen from the scroll opening.

4. Loosen the flywheel capscrew and remove the flywheel washer. Replace the capscrew and tighten finger tight.
5. Attach puller tool to the flywheel as shown in Figure 7. The tool has two jack screws that fit into the tapped holes in the flywheel.
6. Tighten the puller center screw until the flywheel is loose and then remove the flywheel. Use care to avoid dropping the flywheel when it comes loose. Replace the flywheel if any air vanes are missing.
7. Remove the lead from the low oil pressure cut-off switch.
8. Loosen the 1/4 inch hex head cap screws that secure the backplate to the engine and remove the backplate. Note that the N-series generator sets have a two piece backplate.
9. Use a brush or low pressure compressed air to remove any dirt or debris that may be lodged on the engine cooling fins.

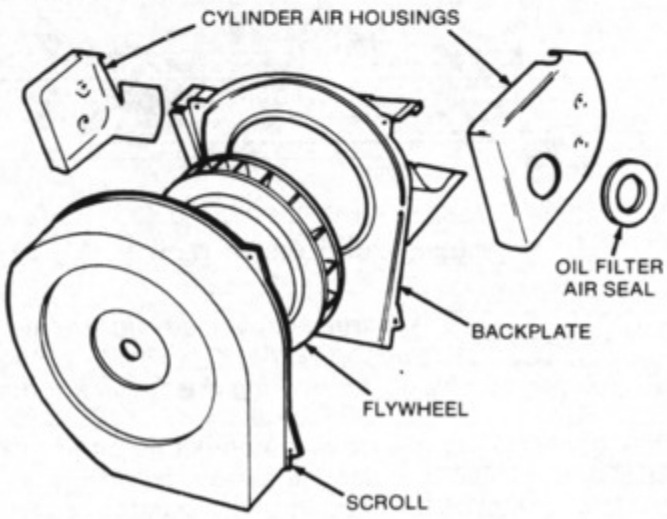

FIGURE 6. COOLING SYSTEM (B-SERIES)

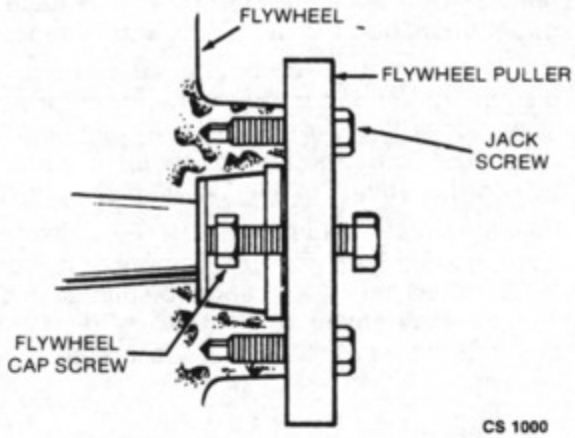

FIGURE 7. FLYWHEEL PULLER

Assembly: Cooling system assembly is the reverse of disassembly. When installing the flywheel, align the keyway in the flywheel with the woodruff key on the crankshaft. Use non-hardening sealer on the flywheel capscrew threads and tighten to the specified torque.

CAUTION ***Overheating might result in engine damage. To avoid overheating, never operate the generator set with any of the cooling system components removed.***

FUEL SYSTEM

The fuel system must be in good condition and properly adjusted for efficient generator set operation. The main components of the fuel system are the air cleaner assembly, carburetor, choke, intake manifold, fuel filter, fuel pump, governor control, and air preheater. When servicing, disassemble, assemble, and adjust as specified in the following sections.

Air Filter Assembly

Two air filter assemblies are in use with B and N series generator sets. Models BF and NH Spec J generator sets use the assembly shown in Figure 8. Models BFA, BGA, and NH Spec K-P generator sets use the assembly shown in Figure 9.

BF and NH Spec J Dissassembly/Assembly: To disassemble, loosen the air filter wing nut and remove the air filter and cover. Loosen the hose assembly clamps (2) located at the carburetor air inlet and behind the support bracket and remove the hose assembly. Loosen the 1/4 inch hex head cap screws that secure the bracket to the generator and remove bracket assembly. Assembly is the reverse of disassembly.

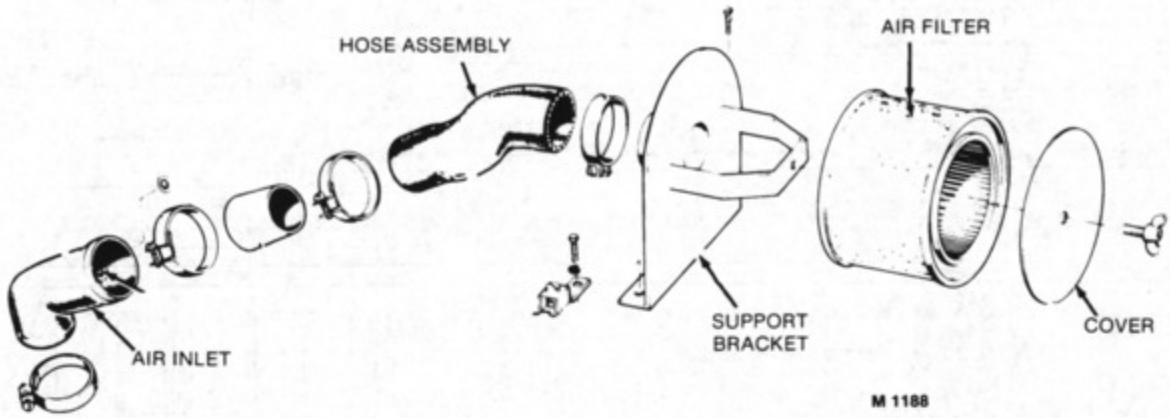

FIGURE 8. BF AND NH SPEC J AIR FILTER ASSEMBLY

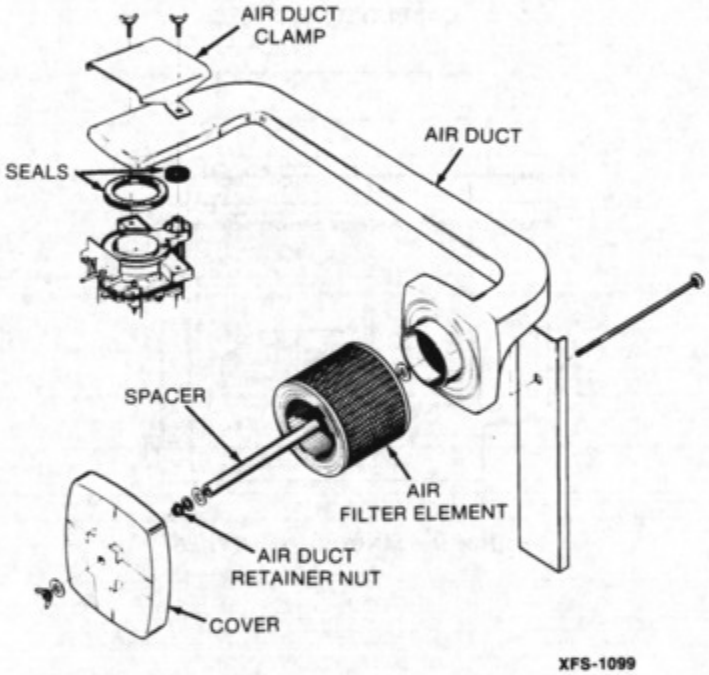

FIGURE 9. BFA, BGA, AND NH SPEC K-P AIR FILTER ASSEMBLY

BFA, BGA, and NH Spec K-P Dissassembly/Assembly: To disassemble, loosen the air filter wing nut and remove the air filter cover and air filter element. Loosen the air duct retaining nut and remove the washers, spacer, and carriage bolt. Loosen the air duct clamp wing screws and remove the air duct clamp, air duct, and adapter to air duct seals. Assembly is the reverse of disassembly.

When assembling, replace any seals that are deteriorated.

Carburetor And Intake Manifold Assembly

The carburetor and intake manifold must be removed as an assembly. Refer to Figure 10.

Disassembly: Remove the air filter assembly as described in the previous section. Disconnect the fuel line, crankcase breather hose, governor control linkage, and choke lead from the carburetor. Loosen the intake manifold cap screws and lift off the carburetor and intake manifold as an assembly. Remove the two intake manifold gaskets and plug the intake ports with a rag to prevent accidental entrance of loose parts.

Assembly: Carburetor and intake manifold assembly is the reverse of disassembly. Use new gaskets when assembling and tighten the manifold cap screws to the specified torque. Do ***not*** use sealer on the intake manifold gaskets.

Carburetor Float Adjustments

A high float setting might result in hard starting and flooding when the engine is warm. A low float setting will result in insufficient fuel delivery which can cause stumbling or hesitation when a load is applied. Remove the intake manifold assembly as described in the previous section. Remove the carburetor from the intake manifold for easier handling when checking the float level. Separate the upper body of the carburetor from the fuel bowl section. Refer to the appropriate section for the adjustment procedures.

BFA, BGA, and NH Generator Sets: A carburetor design change in 1979 resulted in several changes to the carburetor used on BFA, BGA, and NH generator sets. However, the carburetor part number and the generator spec number did not change. Before making any adjustments, identify the carburetor by comparing it with the illustrations in Figure 11. Positive identification is necessary because the float adjustments are not the same for the two carburetors. Refer to the following sections for the appropriate adjustment procedures.

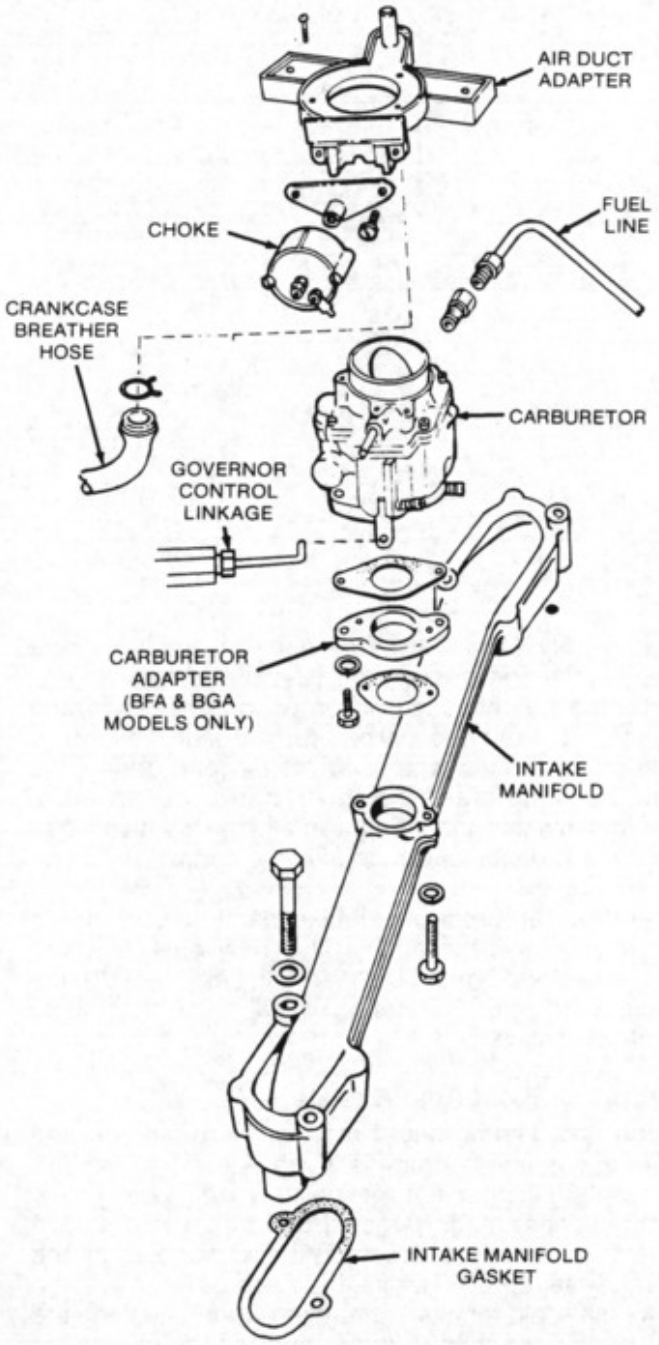

FIGURE 10. INTAKE MANIFOLD ASSEMBLY

CARBURETOR TYPE A (PRE-1979)

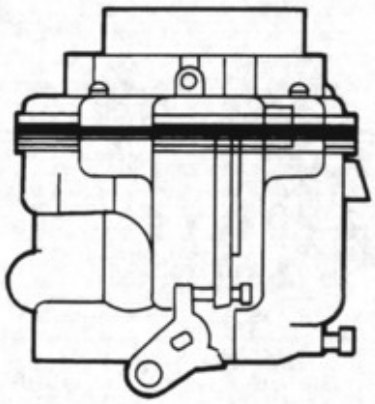

CARBURETOR TYPE B

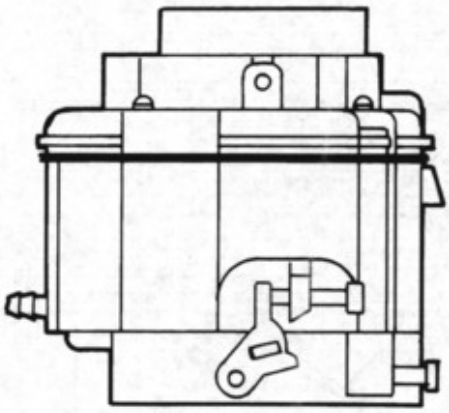

FIGURE 11. CARBURETOR TYPES

Adjust the float setting for ***Carburetor Type A*** using the following procedure:

The float level setting is specified in Table 1. Hold the carburetor as shown in Figure 12 and place a straight edge across the top of the bowl (without gasket). The float assembly tab ***should*** be resting against the needle valve. Measure the distance between the top of the float and the straight edge as shown in Figure 12. If the setting is incorrect, remove the float assembly to adjust. Bend the assembly only at the point indicated in Figure 12.

CAUTION ***Attempting adjustments with the float assembly installed might damage the inlet needle and seat. Remove float assembly before making adjustments.***

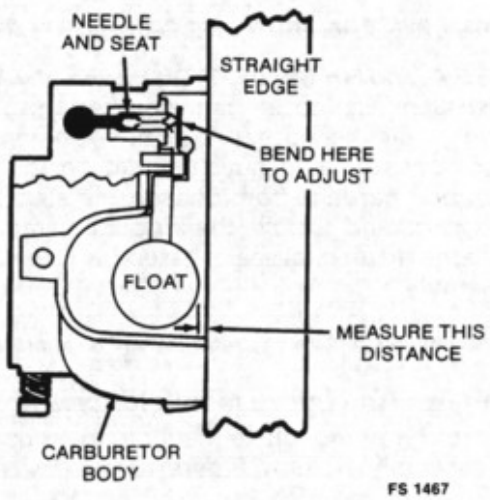

FIGURE 12. CARBURETOR TYPE A ADJUSTMENTS

TABLE 1. CARBURETOR ADJUSTMENT SPECIFICATIONS

MODEL	MIXTURE SETTINGS		FLOAT* DROP	FLOAT* LEVEL
	IDLE	MAIN		
BF	1 1/4	1 1/4	—	5/16 ±1/32 in. (7.9 ±0.8 mm)
Carb. A BFA, BGA, NH	7/8-1 1/8	1 1/4-1 1/2	—	0.07 ±0.02 in. (1.8 ±0.5 mm)
Carb. B BFA, BGA, NH	7/8-1 1/8	1 1/4-1 1/2	0.200 in. (0.005 mm) minimum	0.02 ±0.02 in. (0.5 ±0.5 mm)

*When checking float drop and float level, measure to float body, not seam.

Adjust the float setting for ***Carburetor Type B*** using the following procedure:

A Float Drop and a Float Level setting is specified in Table 1 for the type B carburetor. To check the ***float drop,*** hold the carburetor as shown in Figure 13 and place a straight edge across the top of the bowl (without gasket). The float assembly ***should not*** be resting on the needle valve. Measure the distance between the top of the float and the straight edge as shown in Figure 13. If the setting is incorrect, remove the float assembly to adjust. Bend the assembly only at the point indicated in Figure 13.

CAUTION ***Attempting adjustments with the float assembly installed might damage the inlet needle and seat. Remove float assembly before making adjustments.***

To check the ***float level,*** invert the carburetor as shown in Figure 13 and place a straight edge across the top of the bowl (without gasket). The float assembly ***should*** rest against the needle valve. Measure the distance between the top of the float and the straight edge as shown in Figure 13.

The top of the float should extend out of the float bowl. If the setting is incorrect, remove the float assembly to adjust. Bend the assembly only at the point indicated in Figure 13.

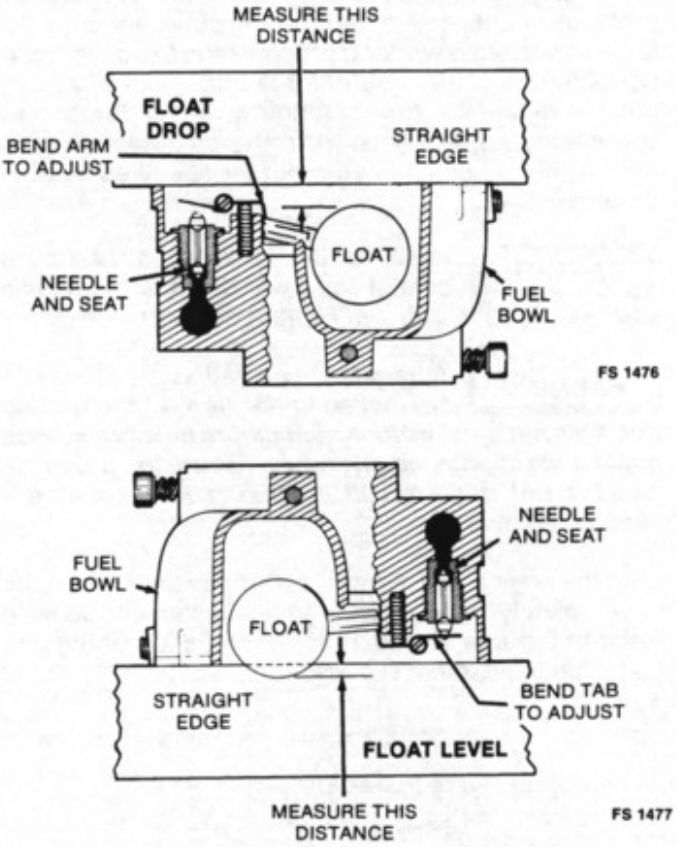

FIGURE 13. CARBURETOR TYPE B ADJUSTMENTS

BF Generator Sets: The float level setting is specified in Table 1. To adjust, invert the fuel bowl cover so that the float assembly is resting on the inlet needle valve as shown in Figure 14. Place the bowl cover gasket on the bowl cover. Measure the distance between the bowl cover gasket and the end of the float (side opposite needle valve). If the setting is incorrect, remove the float assembly to adjust. Bend the float near the shaft to obtain the correct level.

CAUTION ***Attempting adjustments with the float assembly installed might damage the inlet needle and seat. Remove float assembly before making adjustments.***

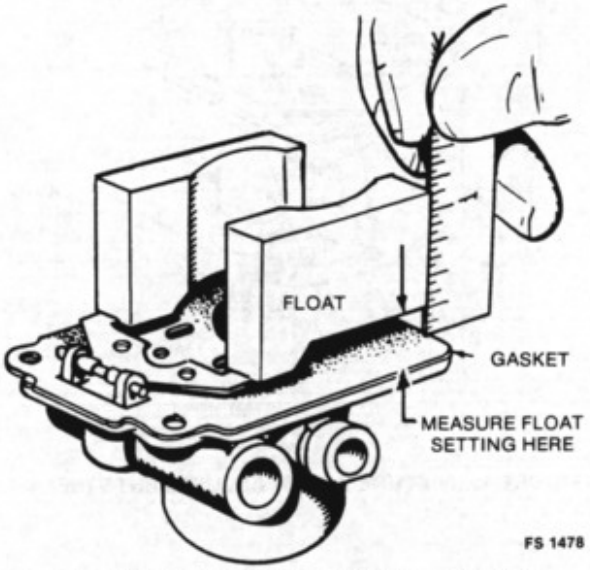

FIGURE 14. BF FLOAT LEVEL ADJUSTMENTS

Mixture Screw Adjustments

The most common cause of poor carburetion is unsatisfactory adjustment of the idle or main mixture adjustment screws. Significant variation from the correct settings may result in serious engine trouble. An overly-rich mixture not only wastes fuel, but can increase engine wear by washing the lubricant from the cylinder walls and diluting the crankcase oil. An overly lean mixture results in a loss of power, flat spots in acceleration and a greater tendency to burn valves and spark plugs.

Mixture screw adjustment should be checked with every engine tune-up and whenever a carburetion problem is suspected. Before adjusting, be sure the ignition system is working properly and the governor is correctly set. If the carburetor is totally out of adjustment, use the mixture settings given in Table 1 as preliminary adjustments. Turn the mixture screws in until lightly seated, then turn out the specified number of turns.

CAUTION ***Forcing the mixture adjustment screws tight will damage the needle and seat. Turn in only until light tension can be felt.***

WARNING ***T-handled main adjustment screws are locked in position with a packing nut. This nut must be loosened before adjustments are made and retightened afterward. Failure to tighten the packing nut might result in leaking fuel, creating a serious fire hazard.***

Start the engine and allow it to warm up until the choke is completely open, then set the adjustment screws. Refer to Figures 15 and 16 for the location of the idle and main adjustment screws.

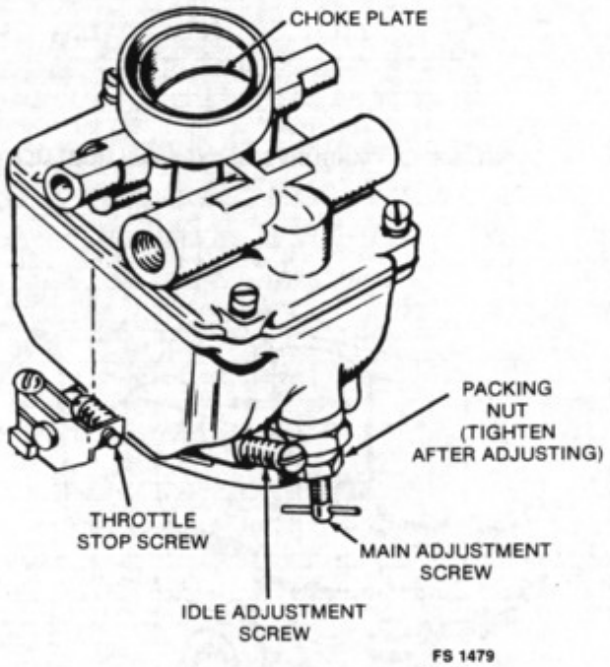

FIGURE 15. MIXTURE SCREW ADJUSTMENTS (BF)

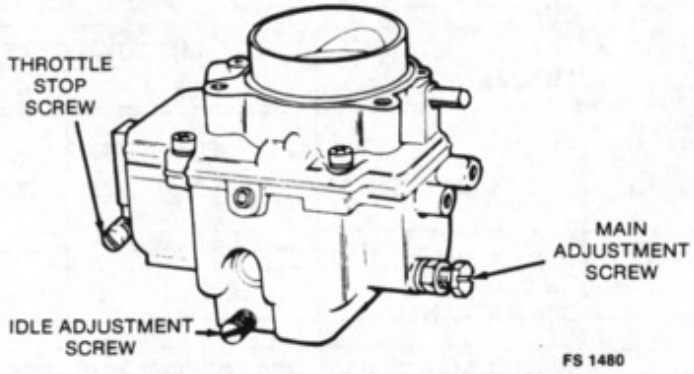

FIGURE 16. MIXTURE SCREW ADJUSTMENTS (BFA, BGA, NH)

Use the following procedure to adjust the idle and main adjustment screws.

1. Remove all electrical loads and connect a voltmeter and frequency meter to the generator set.
2. Pull the governor linkage toward the front of the set so that the throttle lever on the carburetor is resting against the throttle stop screw. Adjust the stop screw to obtain a setting of 90 to 100 volts on the voltmeter.
3. Continue to hold the governor linkage. Determine the best idle mixture setting by first turning the idle adjustment screw inward until set voltage (or frequency) drops (indicating a lean mixture) and then outward until set voltage (or frequency) drops again (rich mixture). Over a narrow range between these two settings the generator set voltage (or frequency) will remain at its highest. Set the idle adjustment screw slightly outward (rich) from the midpoint of this highest voltage range. Readjust the throttle stop screw as needed to retain the 90 to 100 volt setting.
4. Release the governor and apply a full load to the set. Set the main adjustment screw using the same procedure as given above for idle adjustment. Once again, final adjustment should be to a point slightly outward (rich) from the midpoint of the highest voltage range (highest frequency). Set the governor to the voltage and frequency specified in the Governor Adjustments section.
5. Remove the load from the generator, then observe the stability of the generator set. Adjust the sensitivity of the governor as necessary (see Governor Adjustments section). Add and remove a full load several times to make certain the generator set does not bog down or hunt.

Carburetor Overhaul

Carburetion problems not corrected by mixture or float adjustments are usually a result of gummed-up fuel passages or worn internal parts. The most effective solution is a complete carburetor overhaul.

In general, overhauling a carburetor consists of complete disassembly, a thorough cleaning, and replacement of worn parts. Carburetor repair kits are available that supply new gaskets and replacements for those parts most subject to wear.

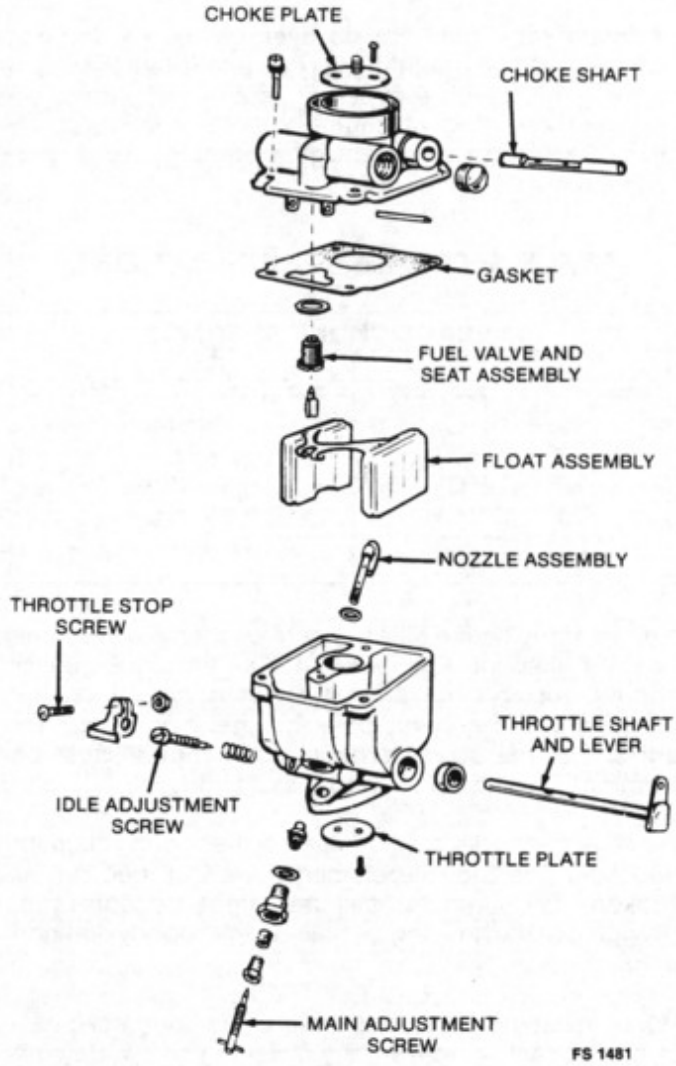

FIGURE 17. CARBURETOR OVERHAUL (BF)

General instructions for overhauling a carburetor are given below. Carefully note the position of all parts while removing to assure correct placement when reassembling. Read through all the instructions before beginning for a better understanding of the procedures involved. Carburetor components are shown in Figures 17 and 18.

Removal And Disassembly: Remove the carburetor and intake manifold assembly as specified in the Carburetor And Intake Manifold Assembly section. Remove the carburetor from the intake manifold and disassemble using the following procedure.

1. Remove the air cleaner adapter and the automatic choke assembly.
2. Remove throttle and choke plate retaining screws, then plates. Pull out throttle and choke shafts, being careful not to damage the teflon coating applied to some throttle shafts.
3. Remove main and idle mixture screw assemblies.
4. Separate the lower section of the carburetor (fuel bowl) from the upper section (fuel bowl cover) of the carburetor.

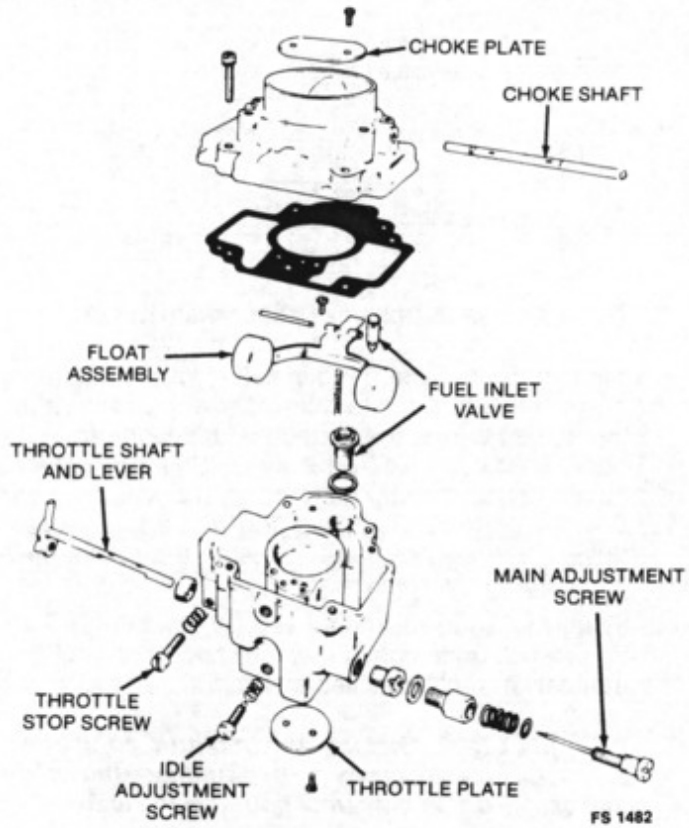

FIGURE 18. CARBURETOR OVERHAUL (BGA, BFA, NH)

5. Carefully note position of float assembly parts, then slide out retaining pin and remove the float assembly, any springs or clips, and the needle valve.
6. Unscrew and remove needle valve seat.

Clean And Repair: When the carburetor is completely disassembled, clean and repair using the following procedure.

1. Soak all metal components not replaced by repair kit in carburetor cleaner. Do not soak non-metal floats or other non-metal parts. Follow the cleaner manufacturer's recommendations.
2. Clean all carbon from the carburetor bore, especially where the throttle and choke plates seat. Be careful not to plug the idle or main fuel ports.
3. Blow out all passages with compressed air. Avoid using wire or other objects for cleaning that might increase the size of critical passages.
4. Check the condition of any needle valve not included in repair kit and replace if damaged (Figure 19). Replace float if loaded with fuel or damaged.
5. Check the choke and throttle shafts for excessive play in their bore and replace if necessary.
6. Replace old components with new parts included in repair kit.

Reassembly And Installation: When the carburetor parts are clean and dry, reassemble using the following procedure.

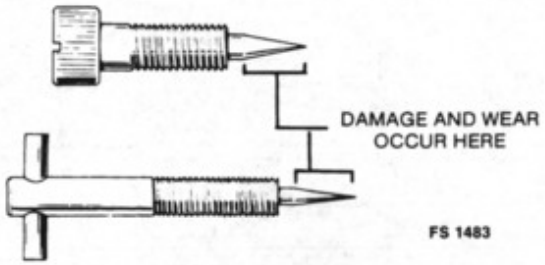

FIGURE 19. MIXTURE NEEDLE INSPECTION

1. Slide in throttle shaft and install throttle plate using new screws, if furnished in repair kit. Before tightening the screws, the plate must be centered in the bore. To do so, back off the throttle stop screw as necessary and completely close the throttle lever. Seat the plate by gently tapping with a small screwdriver, then tighten screws. Install the choke shaft and plate in the same manner.
2. Install main and idle mixture screw assemblies. Turn in screws until lightly seated and then out the number of turns specified in Table 1.

CAUTION ***Forcing the mixture adjustment screws tight will damage the needle and seat. Turn in only until light tension is felt.***

3. Install needle valve and seat, fuel bowl gasket and float assembly. Make sure that all clips and springs are properly placed and that the float moves freely without binding. Check float level and adjust as specified in Carburetor Float Adjustments section.
4. Rejoin upper and lower carburetor sections.
5. Reinstall carburetor and adjust idle and main adjustment screws as specified in the Carburetor Adjustment section.

Choke

The choke consists of a bi-metal coil and an electric heating element. The bi-metal coil connects to the choke shaft and holds the choke plate nearly closed when the engine is cold.

As the engine starts, current is supplied to the electric heating element in the choke cover. Heat from the element causes the bi-metal coil to twist. The twisting action of the coil turns the choke valve shaft and gradually opens the valve. Heat from the element keeps the choke open while the engine is running.

WARNING ***The choke cover gets very hot during normal operation and can cause serious burns if touched. Do not touch the choke cover while the set is operating.***

If the engine starts but runs roughly and blows out black smoke after a minute or two of operation, the choke is set too rich. If the engine starts but sputters or stops before it warms up, the choke is set too lean.

Adjustment: Table 2 lists average choke settings. Loosen the two mounting screws and rotate the choke cover until the correct setting is attained. Check the setting by starting the engine and observing its operation. Be sure to retighten the mounting screws after adjustment (See Figure 20).

TABLE 2. CHOKE SPECIFICATIONS

AVERAGE CHOKE SETTING	
AMBIENT TEMP	CHOKE OPENING
58° F (14° C)	closed
66° F (19° C)	1/4 open
72° F (22° C)	1/2 open
76° F (24° C)	3/4 open
82° F (28° C)	open

Repair: If the choke fails to operate, check to see if the heating element is working. If it is, the choke cover should become hot after a few minutes of engine operation. If the cover does not get hot, check for current at the cover terminal. The engine must be running. Trace down any opens or shorts.

Remove the choke cover to inspect the heating element and coil. See that the element is not burned out or broken. The bi-metal coil must not be damaged, dragging in the housing, or have an improperly directed spiral.

When installing a new coil, maintain the original direction of spiral inward from the fastening screw. Be sure the coil sets squarely in the housing so it will not bind.

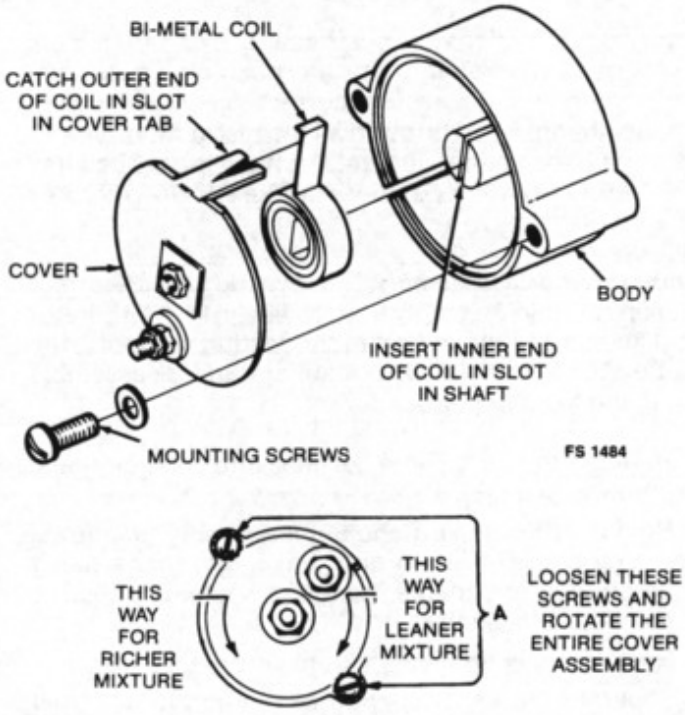

FIGURE 20. ELECTRIC CHOKE ADJUSTMENT

TABLE 3. PUMP SPECIFICATIONS

PUMP MODEL	PRESSURE RATING
Onan Electric (149-1304)	2-3/4 to 3-1/2 psi (19.0 to 24.1 kPa)
Bendix or Facet Electric	2-1/2 to 3-1/4 psi (17.2 to 22.4 kPa)

Fuel Pump

All B and N series generator sets are equipped with an electric fuel pump. The pump supplied with current BFA, BGA, and NH model generator sets is manufactured by Facet (a division of Bendix Corporation) and carries a Facet nameplate. An internal fuel shutoff valve is a standard feature of the current pump. Older versions of this pump carry the Bendix nameplate and do not have an internal fuel shutoff valve. Service procedures for the Facet or Bendix pump are the same.

The BF model generator sets were equipped with a pump that had the Onan nameplate. If the Onan pump malfunctions, it is recommended that it be replaced rather than repaired. The newer Facet pump is carried as the standard replacement pump for the Onan pump.

WARNING ***Do not substitute automotive type electric fuel pumps for standard Onan supplied electric pumps. The output pressure is much higher and can cause carburetor flooding or fuel leakage, creating a fire hazard.***

Pump Test: Test the fuel pump by checking the pump outlet pressure. Use the following procedure.

1. Remove the fuel line from the pump outlet and install a pressure gauge.
2. Press the START switch and hold it for several seconds until pressure reading is constant.
3. Compare the pressure reading with the value given in Table 3. If the retension is good, the pressure should stay constant or drop off very slowly.

A low pressure reading with little or no pressure drop indicates a weak or broken diaphragm or diaphragm spring, worn linkage or leaky check valves. If pressure is above maximum, the pump diaphragm is too tight or the diaphragm (or plunger) return spring is too strong. Any of the above conditions are cause for repair or replacement of the pump.

Fuel Pump Repair: Service of the Facet pump is limited to the bottom cover, filter, plunger tube, and plunger assembly. All parts of the electric system are hermetically sealed in a gas atmosphere and are not serviceable. If electrical failure occurs, replace the pump.

CAUTION ***Do not tamper with the seal at the center of the mounting bracket on the side of the pump as it retains the dry gas which surrounds the electrical system. Electrical system components are not serviceable.***

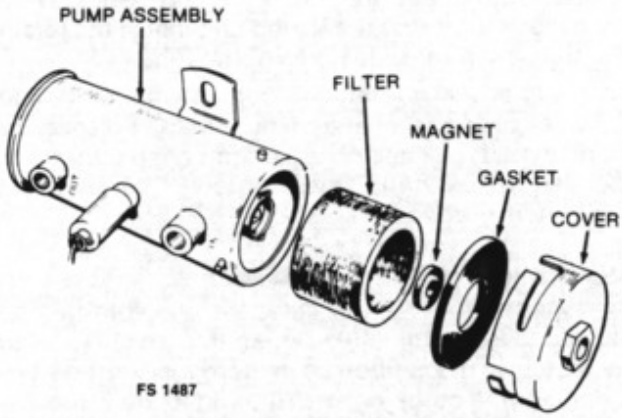

FIGURE 21. REMOVAL OF MAGNET AND FILTER

Use the following procedure for servicing the pump:

1. Using a 5/8-inch wrench, loosen the pump cover, then remove by hand.
2. Remove the filter, magnet and cover gasket (Figure 21).

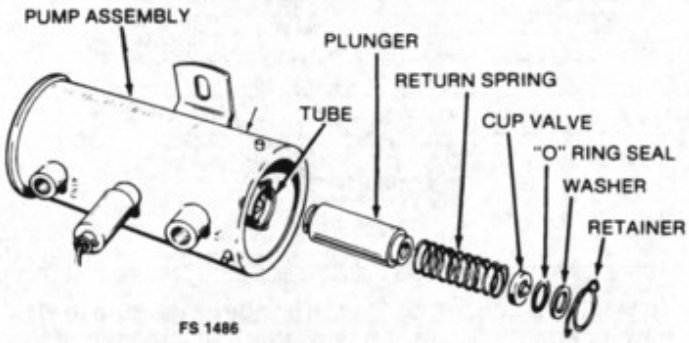

FIGURE 22. REMOVAL OF PLUNGER ASSEMBLY

3. Using a thin nose pliers, remove the retainer spring from the plunger tube. Remove the washer, "O" ring seal, cup valve, plunger spring and plunger from tube (Figure 22).
4. Wash all parts (except gasket and seal) in parts cleaning solvent. Blow out solvent and dirt with low pressure compressed air. Slosh the pump assembly in cleaning solvent, blow dry and swab the inside of the plunger tube with a cloth wrapped around a stick. If the plunger does not wash clean or has rough spots, gently clean the surface with crocus cloth.

WARNING ***Most parts cleaning solvents are flammable and could cause serious personal injury if used improperly. Follow the manufacturers recommendations when cleaning parts.***

5. Insert plunger in tube, buffer spring end first. Check fit by slowly sliding the plunger back and forth in the tube. It should move fully without any tendency to stick. If a click cannot be heard as the plunger is slid from one end to the other, the internal pump assembly is not functioning properly and the pump should be replaced.
6. Install plunger spring, cup valve, "O" ring seal and washer. Compress the spring and install the retainer with ends in the side holes of the tube.
7. Check cover gasket and replace if deteriorated. Place cover gasket and magnet in the bottom cover and install filter and cover assembly on pump. Twist cover on by hand and tighten securely with a 5/8-inch wrench.

Fuel Shutoff Valve (When Used)

The external fuel shutoff solenoid prevents fuel flow into the carburetor after set shutdown. It connects electrically to the ignition power terminal and energizes during engine cranking and running to allow fuel flow. The device fastens directly to the fuel pump inlet (Figure 23).

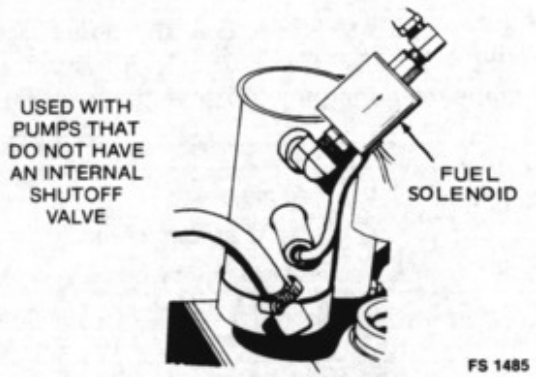

FIGURE 23. FUEL SOLENOID

To test the solenoid, connect a jumper wire from the B+ terminal on the control box to the plus (+) side of the ignition coil. If the solenoid is good, a click should be heard when the wire makes contact.

CAUTION ***Twisting the body of the solenoid will cause internal damage. Do not apply twisting force to the fuel solenoid, except with a wrench on the hex nut located near the fuel inlet.***

Fuel Filters

The fuel filter on all B and N series generator sets is incorporated within the fuel pump. Refer to the following sections for service information.

Facet/Bendix Fuel Pump Filter: These pumps incorporate a filter within the casing of the pump (Figure 24). Use a 5/8 inch wrench to twist off the bottom of the pump and remove the filter element. If the filter is dirty, replace it along with the cover gasket.

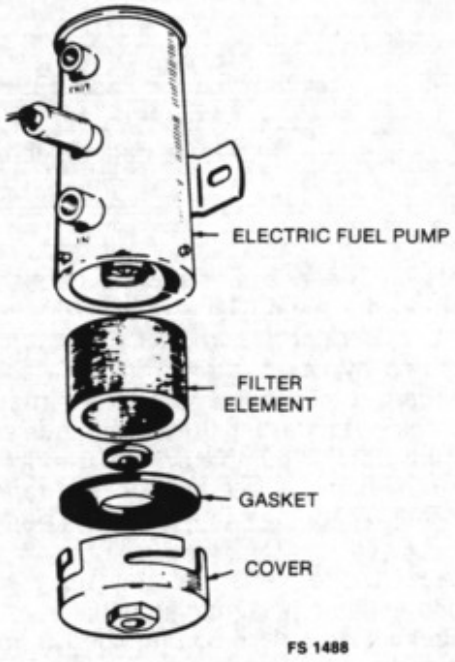

FIGURE 24. BENDIX AND FACET ELECTRIC PUMP FILTER

Onan Fuel Pump Filter: The Onan electric fuel pump has two screen filters mounted in the top of the pump. To gain access, remove the four Phillips screws and lift off top pump assembly (Figure 25). Remove and clean both the coarse and fine filter screens and reinstall with a new gasket. Remount the top pump assembly, making sure the gasket is in place.

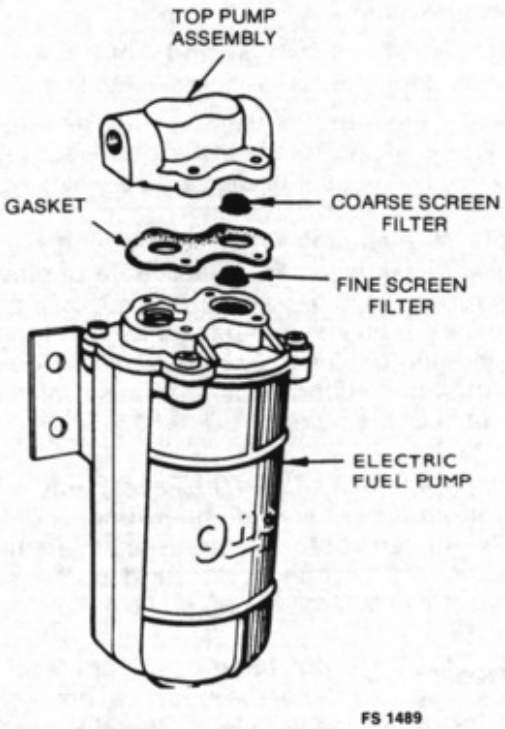

FIGURE 25. ONAN ELECTRIC PUMP FILTER LOCATION

Governor Adjustments

Before making governor adjustments, run the unit about 10 minutes under light load to reach normal operating temperature. If governor is completely out of adjustment, make a preliminary adjustment at no load to first attain a safe voltage and speed operating range.

Engine speed determines the output voltage and frequency of the generator. By increasing the engine speed, generator voltage and frequency are increased. By decreasing the engine speed, generator voltage and frequency are decreased. An accurate voltmeter and frequency meter should be connected to the generator in order to correctly adjust the governor. A small speed drop not noticeable without instruments will result in an objectionable voltage drop.

A binding in the bearings of the governor shaft, in the ball joint, or in the carburetor throttle assembly will cause erratic governor action or alternate increase and decrease in speed (hunting). A lean carburetor adjustment can also cause hunting. Springs tend to lose their calibrated tension through fatigue after long usage.

If the governor action is erratic after all adjustments are made, replace the spring. If this does not improve operation, the problem is probably within the governor mechanism. Refer to Governor Cup section for service procedures.

Adjustments to the governor should be made in the following sequence.

1. Adjust the carburetor idle adjustment screw and main adjustment screw as specified in the Mixture Screw Adjustments section before making any adjustments to the governor.

WARNING ***Touching hot exhaust pipes or moving parts might result in serious personal injury. Use extreme caution when making adjustments while the engine is running.***

2. Adjust the length of the governor linkage and check for binding or excessive looseness. The length of the linkage connecting the governor arm to the throttle shaft assembly is adjusted by loosening the lock nut and rotating the ball joint (see Figure 26). Adjust this length so that with the engine stopped and tension on the governor spring, the stop on the throttle shaft assembly almost touches the stop on the side of the carburetor. (One more turn of the governor ball joint would allow the throttle shaft stop to touch the carburetor.) Tighten lock nut.
3. With the warmed up unit operating at ***no load,*** adjust the tension of the governor spring to obtain 127 volts and 61 hertz for voltage and speed.
4. Check the voltage and speed first with a load applied and then with no load applied. The voltage and speed should stay within the limits shown in Table 4. Adjust the sensitivity to give the closest regulation (least speed and voltage difference between no load and full load) without causing a hunting condition. To increase sensitivity, (closer regulation) shift the spring toward the governor shaft.

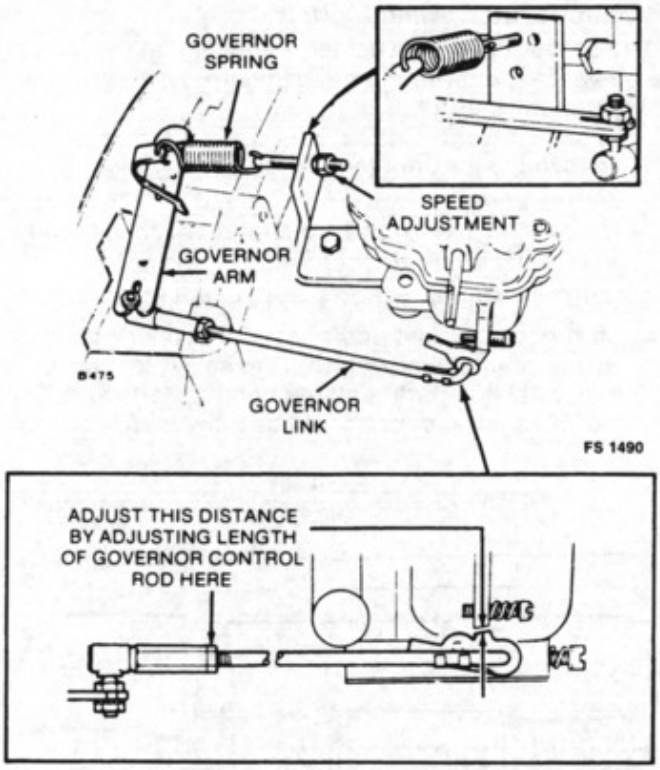

FIGURE 26. GOVERNOR ADJUSTMENTS

TABLE 4
VOLTAGE AND SPEED CHARTS

VOLTAGE CHART FOR CHECKING GOVERNOR REGULATION	120 VOLT 1 PHASE 2 WIRE
MAXIMUM NO-LOAD VOLTAGE	132
MINIMUM FULL-LOAD VOLTAGE	108
SPEED CHART FOR CHECKING GOVERNOR REGULATION	
MAXIMUM NO-LOAD SPEED (RPM) HERTZ (FREQUENCY)	1890 63
MINIMUM FULL-LOAD SPEED (RPM) HERTZ	1770 57

5. Recheck the speed adjustment made in step #4.
6. Set the carburetor throttle stop screw as specified in the Mixture Screw Adjustments section.

Carburetor Air Preheater (Optional on Certain Models)

The carburetor air preheater is adjusted at the factory and will seldom require adjustment unless disturbed. Adjustment is as follows:

1. Loosen the lock nut (see Figure 27).
2. With ambient temperature at 80°F (27°C), turn vernatherm in or out so plunger just touches shutter lever with shutter door closed.
3. Hold vernatherm in place and tighten lock nut.
4. Start generator set and check for proper operation and normal power output from set. After warm up and with compartment temperature above 100°F (38°C), shutter door should be fully open.

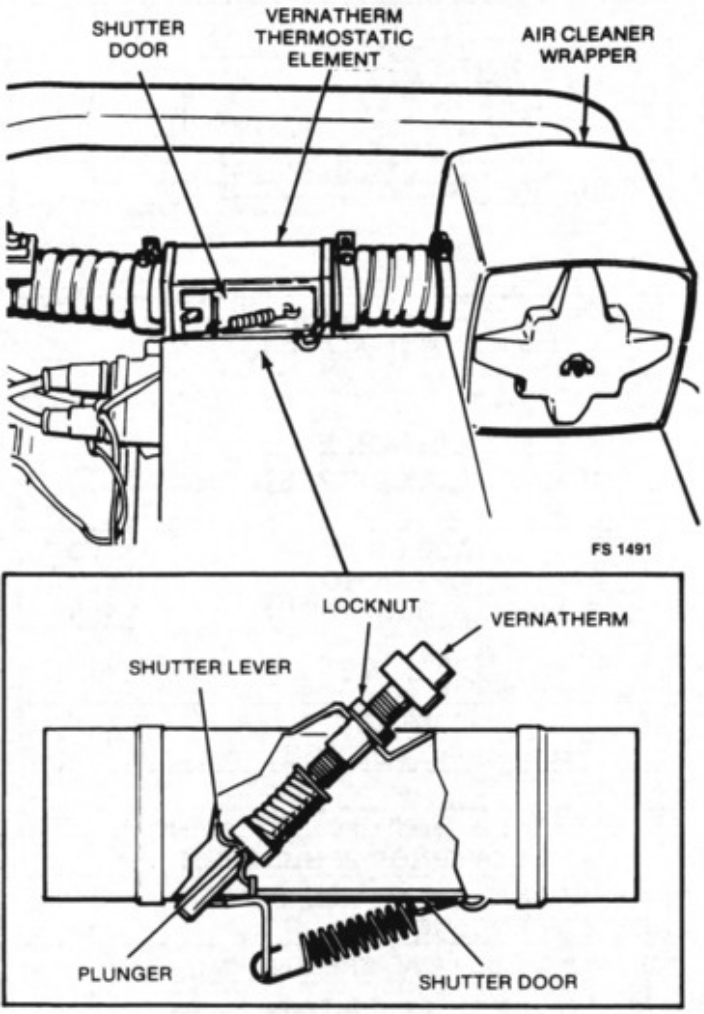

FIGURE 27. CARBURETOR AIR PREHEATER

IGNITION SYSTEM

The ignition system consists of the breaker points, condenser, ignition coil, spark plugs, and wiring. For reliable generator set operation, the complete ignition system must be in good working order and properly adjusted. Many generator set "problems" can be traced to an improperly maintained ignition system. Refer to the following sections when servicing or making adjustments.

Breaker Points And Condenser

The breaker points and condenser mount on top of the engine block directly behind the carburetor. A small plunger rides on an ignition cam at the end of the camshaft. The plunger actuates the points which open and close twice with every revolution of the camshaft. Point opening is determined by the point gap setting. The exact timing of the ignition spark is dependent on when the points open.

It is important that the breaker points have the correct gap for easy starting, efficient operation, full power, and proper cooling. A retarded ignition will reduce efficiency while an advanced ignition will cause overheating.

The condenser extends point life by preventing arcing across the opening breaker points. A defective condenser causes a weak spark and rapid point wear. Replace the condenser if defects are suspected. A new condenser is supplied with the engine tune-up kit.

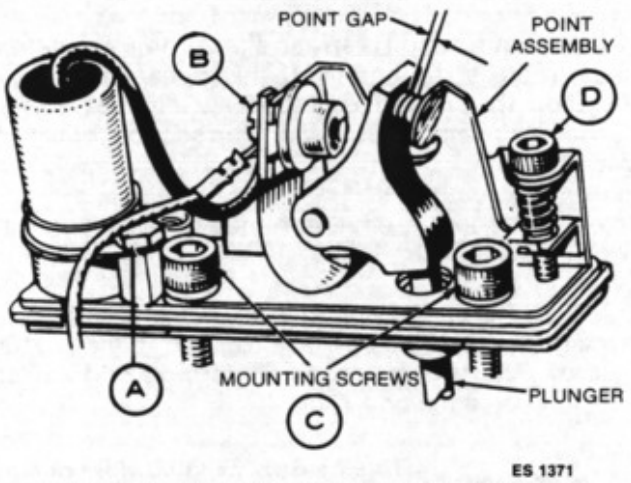

FIGURE 28. TIMING AND POINT GAP ADJUSTMENT

Breaker Point Replacement And Adjustment: Inspect the breaker points at the interval specified in the Operators Manual and replace if pitted or burned. Filing of the points is not recommended. Use the following procedure to replace and adjust the points.

The ignition adjustments should be made with the engine in a static condition and cold.

1. Remove cover by loosening screw and lift off.
2. Remove the spark plugs and rotate the flywheel in a clockwise direction until the points are open the maximum amount. The flywheel can be rotated by turning the flywheel capscrew with a socket wrench.
3. Remove the condenser (screw A) and detach the condenser lead and coil lead (screw B). See Figure 28.
4. Remove the mounting screws (screw C) and lift the breaker assembly from the engine.
5. Replace the condenser and point assembly and install in reverse order of removal.

6. Use an allen head wrench to adjust set screw D to obtain the gap setting specified in the Specifications section. Measure the point gap with a flat thickness gauge (See Figure 28).

Make sure feeler gauge is clean and free of any grease, oil or dirt.

The timing is adjusted during initial engine assembly and is fixed by the point gap adjustment. No other adjustment or alignment is necessary.

7. Replace the point box cover and spark plugs.

Ignition Coil

The ignition coil is a transformer that steps up the battery voltage to about 20,000 volts for spark plug firing. The coil is composed of a core, a primary winding, insulators, secondary winding, sealing compound, bakelight cap, and the outside case and necessary terminals (Figure 29).

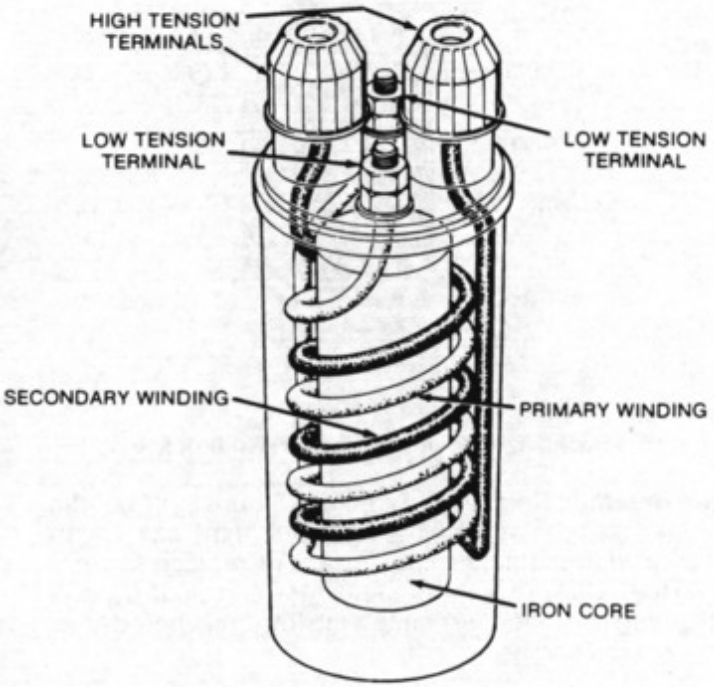

FIGURE 29. IGNITION COIL

Ignition coils do not normally require any service other than to keep all terminals and connections clean and secure. Also, check for loose seams, dents, punctures, and other mechanical damage. If poor ignition performance is evident and other ignition components are not at fault, the coil can be tested with the specified procedures. When replacing the coil, observe proper polarity. The negative (−) terminal connects to the breaker points and the positive (+) terminal connects to a battery positive (B+) source within the control.

Ignition Coil Testing

A quick test of coil output can be made by checking the ignition spark. Remove one of the spark plugs. Reconnect the spark plug wire to the spark plug. Ground the spark plug to bare engine metal and crank the engine. A good spark should be observed between the plug center electrode and side electrode. If the spark is weak, the coil, points and condenser, or wiring is probably defective.

Direct Testing With Ohmmeter: To test a coil directly, remove all the wires connected to it. For easier access to the terminals, the coil may be removed from the engine. Use the following procedure to test.

1. Inspect terminals for corrosion, looseness, cracks, dents or other damage. Look for evidence of electrical leakage around high tension terminals (indicated by carbon runners). Damaged or leaking coils should be replaced.
2. Clean the outside of the coil with a cloth dampened in parts cleaning solvent.
3. To measure resistance in the primary circuit, connect one ohmmeter lead to the positive (+) terminal and the other to the negative (−) terminal on the coil. The resistance should be between 3.87 and 4.73 ohms. A high resistance value indicates an open circuit or poor connection inside the coil, and the coil should be replaced.
4. To measure resistance in the secondary circuit, connect the ohmmeter leads to the two high tension terminals (see Figure 30). The resistance measured should be between 12,600 and 15,400 ohms. A lower resistance value indicates a shorted secondary winding. A higher resistance value indicates the coil has excessive internal resistance or an open circuit. Replace coil if not within specifications.

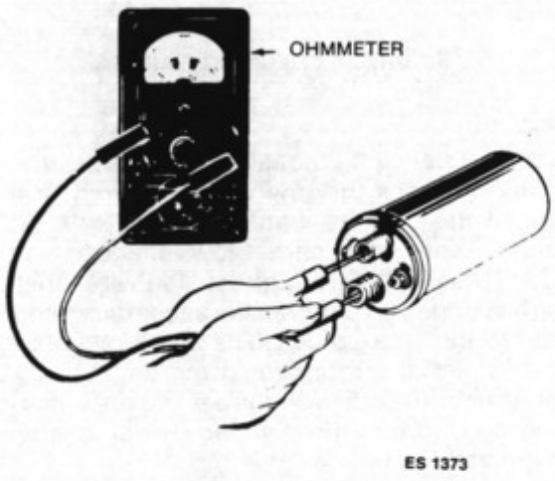

FIGURE 30. TESTING COIL SECONDARY

Spark Plugs

Remove and inspect the spark plugs at the intervals recommended in the Operators Manual. A careful examination of the plug can often pin point the source of an engine problem. The following covers some common spark plug conditions and the probable cause.

- One Plug Carbon Fouled — Check for an open ignition cable or low compression.
- Black Soot Deposits — Check for faulty choke operation, overly rich fuel mixture, or dirty air filter.
- Oil Fouled — Check for faulty crankcase breather, worn rings, or worn valve guides.
- Burned Or Overheated — Check for leaking intake manifold gaskets, lean fuel mixture, or incorrect ignition timing. Be sure plug is not in wrong heat range.
- Chipped Insulator — Check for advanced timing. Bend only side electrode when setting gap.
- Splash Fouled — Check for accumulated combustion chamber deposits. See Cylinder Head section.
- Light Tan Or Grey Deposits — Normal plug color.

Clean or replace fouled plugs and regap (see Figure 31) to value specified in the Specifications section. Use only the recommended plug type.

ES 1374

FIGURE 31. CHECKING PLUG GAP

Wiring

Ignition system wiring includes: (1) One positive (B+) wire which carries the low voltage current from the battery to the primary winding of the coil. (2) One negative (−) wire which carries low voltage to the points and condenser. (3) Two high tension wires that carry the high voltage current from the secondary winding of the coil to the spark plugs. The spark plugs and coil secondary are all grounded to the engine making a complete circuit for the voltage back to the battery. The ignition coil primary (low voltage side) is grounded when the breaker points close.

Check all low voltage wiring for loose connections and cuts or breaks in the insulation. Clean all terminals and connections and test for continuity with an ohmmeter. Use a megger to check for breaks in the spark plug wire insulation.

CRANKCASE VENTILATION SYSTEM

The crankcase breather prevents pressure from building up in the crankcase. It also prevents oil contamination by removing moisture or gasoline vapors and other harmful blow-by materials from the crankcase. These vapors are routed to the carburetor where they are mixed with incoming air and burned in the combustion chamber. A sticky breather valve can cause oil leaks, high oil consumption, rough idle, reduced engine power and a rapid formation of sludge and varnish within the engine.

Crankcase Breather Service

If the crankcase becomes pressurized as evidenced by oil leaks at the seals, use the following procedures to service.

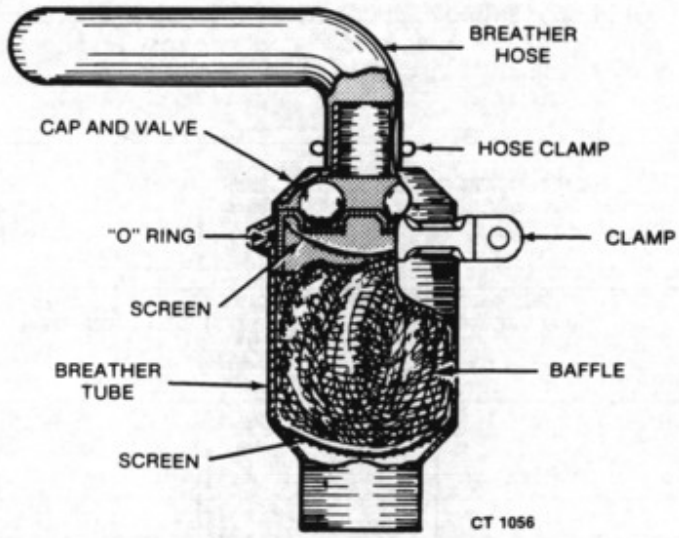

FIGURE 32. CRANKCASE BREATHER FOR NH

NH Breather: Remove the cap (see Figure 32) from the crankcase tube and pry the valve out of the cap. Clean the valve in parts cleaning solvent or replace if worn. Pull the baffle out of the breather tube and clean in parts cleaning solvent. Assemble with the perforated disk toward the engine.

WARNING ***Most parts cleaning solvents are flammable and could cause serious personal injury if used improperly. Follow the manufacturers recommendations when cleaning parts.***

BF, BFA, And BGA Breather: Remove the breather tube from the valve cover (see Figure 33) and pull out the pack. Remove the valve cover, spring, washer, reed valve, and breather baffle. Clean all parts in parts cleaning solvent and replace any worn parts. The reed valve must be flat with no sign of a crease. Assemble using a new gasket and plastic tie.

WARNING ***Most parts cleaning solvents are flammable and could cause serious personal injury if used improperly. Follow the manufacturers recommendations when cleaning parts.***

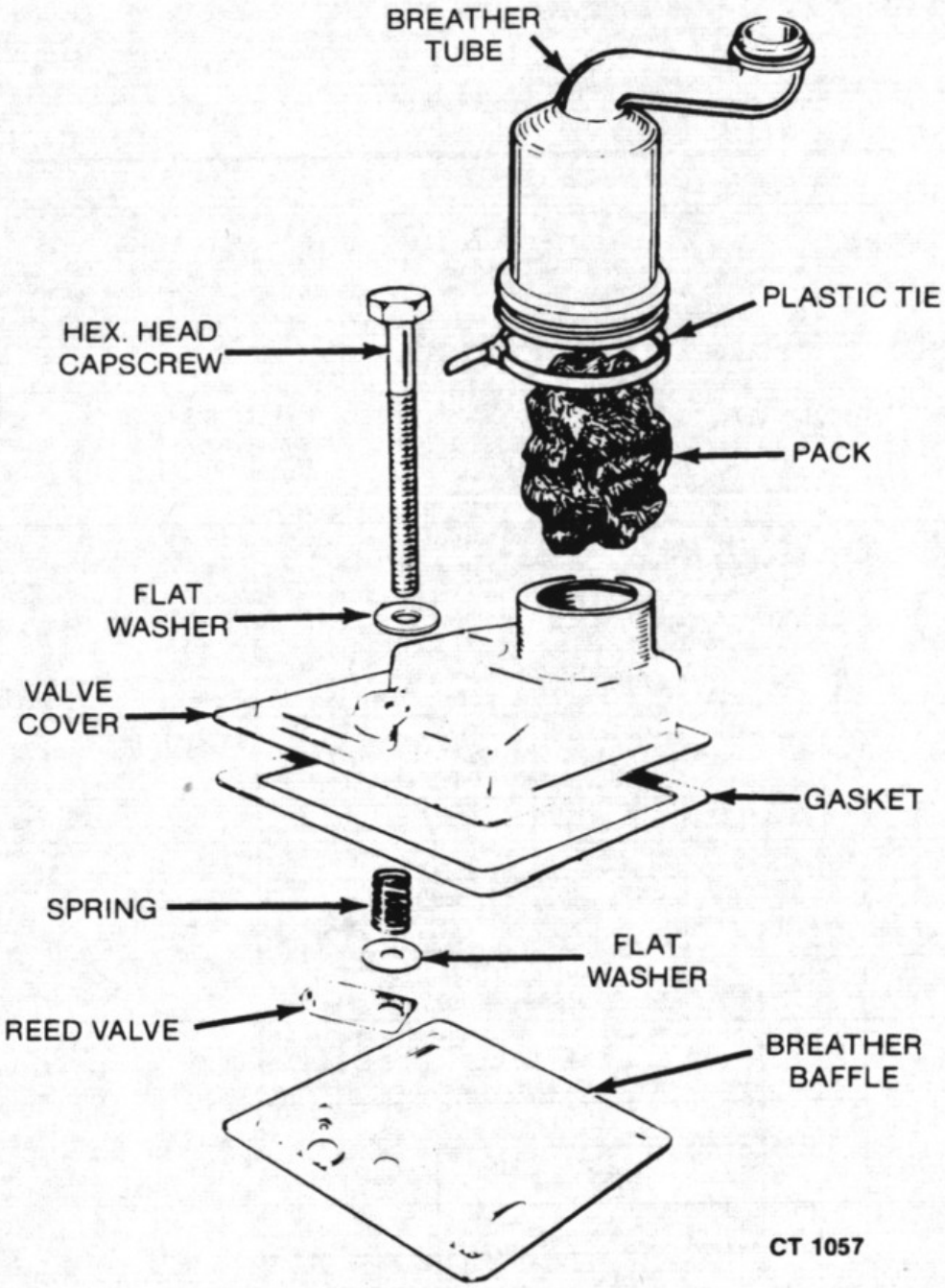

FIGURE 33. CRANKCASE BREATHER FOR BF, BGA, AND BFA

Reed valve must be assembled as shown with washer on top and breather baffle on the bottom.

CAUTION ***Over tightening the valve cover might cause an air leak and allow dirt to enter the engine. Be careful not to distort the valve cover when tightening.***

Control

GENERAL

The control system includes all functions that relate to starting, monitoring for fault conditions, instrumentation, battery charging, and stopping. This section covers how the control operates, where the components are located, and basic troubleshooting procedures. Two control systems are used with B and N series generator sets. Each system is covered separately in this section.

OPERATION DESCRIPTION FOR BF AND NH (SPEC J) CONTROLS

This operation description applies to BF and NH (Spec J) series generator sets. The wiring diagrams are included as examples to help trace or isolate problems. However, always refer to the specific wiring diagram that corresponds to the model and spec number of the generator set when troubleshooting.

Starting

When switch S1 is closed to START (Figure 34), battery ground is connected through switch S1 to the start solenoid K1 and the crank ignition relay K2. Start solenoid relay K1 closes its normally open K1 contacts to connect battery positive to the cranking windings of the generator and to the electric choke E1. The generator acts as a motor and cranks the engine. Ignition relay K2 closes its normally open K2 contacts to connect battery positive to the ignition coil T1, and fuel pump E4. This provides the ignition spark and pumps fuel to the carburetor.

Start Disconnect-Run

When the engine starts, the generator begins to supply voltage to the ignition coil, fuel pump, and fuel solenoid through fuse F2. Releasing the start-stop switch de-energizes the K1 start solenoid and the K2 ignition relay and opens the K1 and K2 contacts. The engine continues to run because the generator is now supplying voltage to operate the ignition coil, fuel pump, and fuel solenoid. Generator voltage is also supplied through CR1 to charge the battery and to the electric choke heater E1 to open the choke.

Stopping

Moving switch S1 to STOP position connects battery ground to terminal 2. This grounds the ignition coil to stop the spark at the plugs. When the engine stops, blocking diode CR1 prevents battery discharge through the generator.

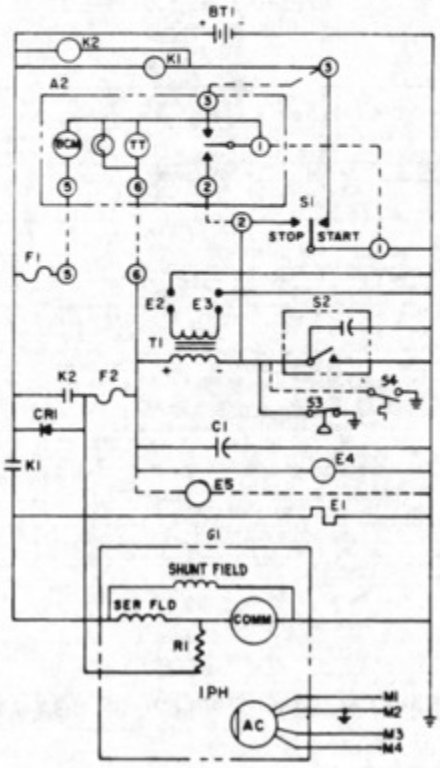

A2 .....Deluxe Remote Control
BT1.....Battery
E1 .....Electric Choke
E2,E3 .....Spark Plugs
E4 .....Fuel Pump
E5 .....Fuel Solenoid
G1 .....Generator
K1 .....Start Solenoid
K2 .....Crank Ignition Relay
S1 .....Start-Stop Switch
S2 .....Breaker Points Assembly
S3 .....Low Oil Pressure Switch
S4 .....High Air Temperature Switch (Optional)
T1 .....Ignition Coil

FIGURE 34. TYPICAL SCHEMATIC AND PARTS IDENTIFICATION

TROUBLESHOOTING THE BF AND NH (SPEC J) CONTROL

To correct a problem, answer the question in the appropriate troubleshooting chart either "YES" or "NO." Refer to the number in that column and proceed to that step.

Use the wiring diagrams (see Figures 36 and 37) for location of terminals, relays, etc. Figure 35 shows some of the control components for these generator sets.

The troubleshooting chart is divided into seven sections. Determine the problem and then refer to the chart (A, B, C, D, E, F, or G) for the troubleshooting procedures.

A. Engine does not crank.
B. Engine cranks but does not start.
C. Engine starts but stops when start switch is released.
D. Engine is running - then stops.
E. Low battery - no charge rate.
F. Running time meter inoperative.
G. Battery condition meter inoperative.

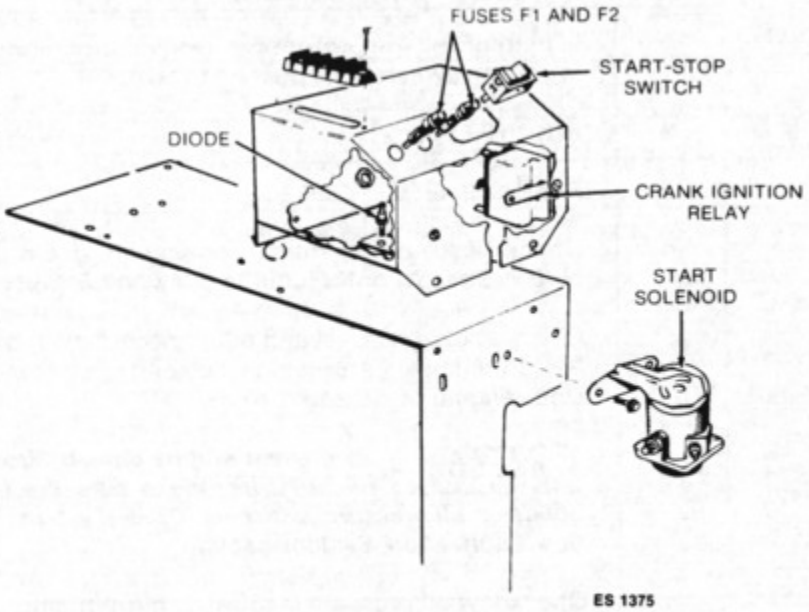

FIGURE 35. BF AND NH (SPEC J) CONTROL

A.	ENGINE DOES NOT CRANK	YES	NO
1.	Does engine crank at set but not at remote start panel?	2	4
2.	Check remote start control wires for continuity between the generator set and the remote start panel. Are control wires sized large enough to avoid excessive voltage drop?	4	3
3.	Replace control wires with correct wire gauge.	—	—
4.	Check condition of battery and terminal connections. Is battery fully-charged and are all terminal connections clean and tight?	6	5
5.	Recharge battery and clean and tighten all terminal connections.	—	—
6.	Is battery voltage present between control terminals 3 and 5 when switch S1 is pushed to START? When the remote start switch is pushed to START? (Make certain fuse F1 is not open.)	8	7
7.	Replace start-stop switch S1 or remote start switch as required.	—	—
8.	Is battery voltage present between K1 start solenoid terminal S1 and ground when start-stop switch S1 is pushed to START?	10	9
9.	Replace K1 start solenoid.	—	—
10.	Check generator brushes, commutator, DC armature windings, and field windings. See Generator Service Procedures section.	—	—

B.	ENGINE CRANKS BUT DOES NOT START	YES	NO
1.	Is battery voltage present between control terminal 6 and ground when start-stop switch S1 is pushed to START?	5	2
2.	Is fuse F2 open?	3	4
3.	Replace fuse F2.	—	—
4.	Check all solenoid terminal connections. If OK, replace K1 start solenoid on BF (Spec A) or K2 ignition relay on BF (Spec B) and NH (Spec J).	—	—
5.	Check engine oil level and add if necessary. If oil level is OK, remove wire lead from low oil pressure switch and push start-stop switch S1 to START. Does engine crank and run? **CAUTION** ***To prevent engine damage from low oil pressure, make sure the engine builds up oil pressure to 30 psi (207 kPa) after starting. See Lubrication System section.***	7	6
6.	Check low oil pressure lead wire for grounding and repair or replace as necessary. Will engine start?	—	8
7.	Check low oil pressure switch operation. Switch should open when oil pressure builds up and close when oil pressure drops. Replace if necessary.	—	—
8.	Does engine have high air temperature switch?	9	12
9.	Remove wire lead from high air temperature switch and push start-stop switch S1 to START (do not let lead ground while disconnected). Does engine crank and run?	11	10
10.	Check high air temperature lead wire for grounding and repair or replace as necessary. Will engine start?	—	12
11.	Check high air temperature switch operation. Switch should be open unless engine overheats. Replace if necessary.	—	—
12.	Does the fuel pump operate and does the fuel solenoid open during cranking?	15	13
13.	Check the fuel pump lead wire connections and repair or replace as necessary. Will pump operate?	—	14
14.	Refer to the Fuel System section for testing and service procedures.	—	—
15.	Is the choke closed? A small pointer on the choke shaft indicates if the choke is open or closed.	16	14
16.	Refer to the Ignition System section for testing and service procedures.	—	—

C.	ENGINE STARTS BUT STOPS WHEN START SWITCH IS RELEASED	YES	NO
1.	Connect voltmeter between control terminal 6 and ground and crank engine. Is there a DC voltage output from the generator? (Fuse F2 should be OK if unit started initially.)	—	2
2.	Check R1 resistor and connections. If OK, check brushes, commutator, armature windings, and field windings. Refer to Generator Service Procedures section.	—	—
D.	**ENGINE IS RUNNING - THEN STOPS**	**YES**	**NO**
1.	Check for low fuel level or low oil level. Refill with fuel or oil as required. Will set start and run without stopping?	—	2
2.	Check for low oil pressure, low oil pressure switch malfunction, overheating, or high air temperature switch malfunction. See sections B5 through B11 for the troubleshooting procedures. Does this locate the problem?	—	3
3.	Connect a voltmeter between control terminal 6 and ground. Push the start-stop switch S1 to START. Is battery voltage present?	6	4
4.	Is fuse F2 open?	5	6
5.	Replace fuse F2.	—	—
6.	Check for an open R1 resistor or for open connections between R1 and fuse F2. If OK, check generator brushes, commutator, DC armature windings, and field windings. See Generator Service Procedures section.	—	—
E.	**LOW BATTERY**	**YES**	**NO**
1.	Does battery charger show a normal charge rate of 1 to 1-1/2 amps?	2	3
2.	Check condition of battery. Generator set charger will not recharge a battery that is in a very low state of charge. Use a separate battery charger to bring battery up to full charge.	—	—
3.	Check wire connections between CR1 diode, K1 start solenoid, and battery. Does this cause battery charger to show normal charge?	—	4
4.	Is CR1 diode shorted or open?	5	6
5.	Replace defective CR1 diode.	—	—
6.	Replace R1 resistor.	—	—
F.	**RUNNING TIME METER INOPERATIVE**	**YES**	**NO**
1.	Check wires between control terminal 6 and battery positive terminal for running time meter, and ground wire and connection to meter. Does this correct problem?	—	2
2.	Replace defective running time meter.	—	—

G.	BATTERY CONDITION METER INOPERATIVE	YES	NO
1.	Is fuse F1 open?	2	3
2.	Replace fuse F1.	—	—
3.	Check wire connections between control terminal 5 and battery condition meter and between battery condition meter and ground. Does this correct problem?	—	4
4.	Use voltmeter to measure voltage between battery charge meter positive terminal and ground. Does voltmeter read battery voltage minus 10 volts?	6	5
5.	Replace defective zener diode.	—	—
6.	Replace defective battery condition meter.	—	—

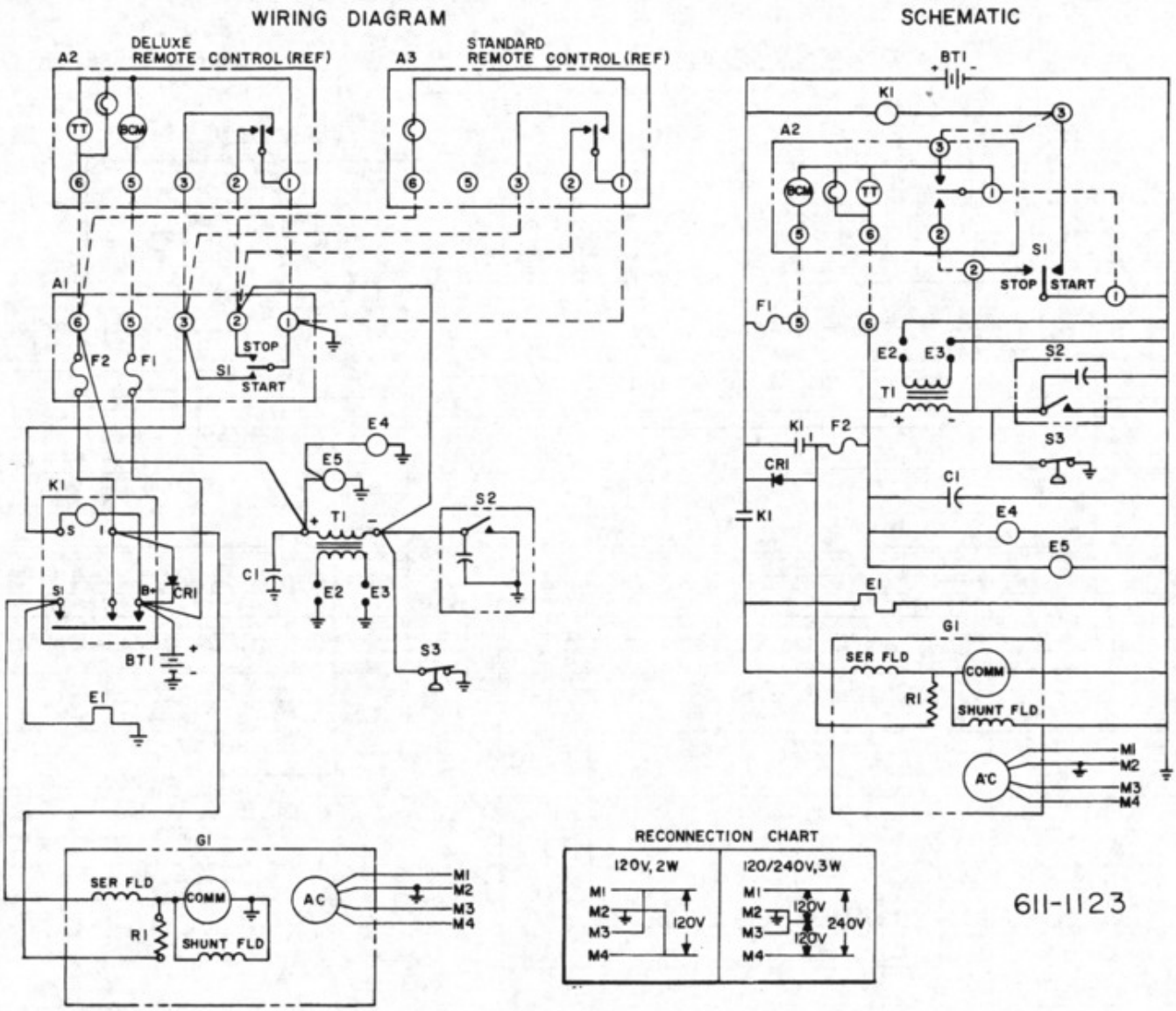

REF. DES.	QTY.	DESCRIPTION
A1	1	Control Assy
A2	1	Deluxe Remote Control (Ref)
A3	1	Standard Remote Cont (Ref)
BT1	1	Battery 12 V
C1	1	Capacitor
CR1	1	Diode Assy (Ref)
E1	1	Choke - Onan
E2,3	2	Spark Plug
E4	1	Solenoid-Fuel (Ref)
E5	1	Fuel - Pump (Ref)
F1,2	2	Fuse (9 Amp, 32 V) (Ref)
G1	1	Generator
K1	1	Solenoid - Start
R1	1	Resistor Fixed (Ref)
S1	1	Switch-Start-Stop
S2	1	Breaker & Cap Assy
S3	1	Switch - Low Oil Press (Ref)
T1	1	Coil - Ignition
Option	1	Wiring Harness (Conn-Remote) (Ref)
Option W1	1	Wiring Harness (Cable-Remote Control) (10 Feet Long) (Ref)
Option W2	1	Wiring Harness (Cable-Remote) Control (30 Feet Long) (Ref)

FIGURE 36. TYPICAL WIRING DIAGRAM - BF SPEC A

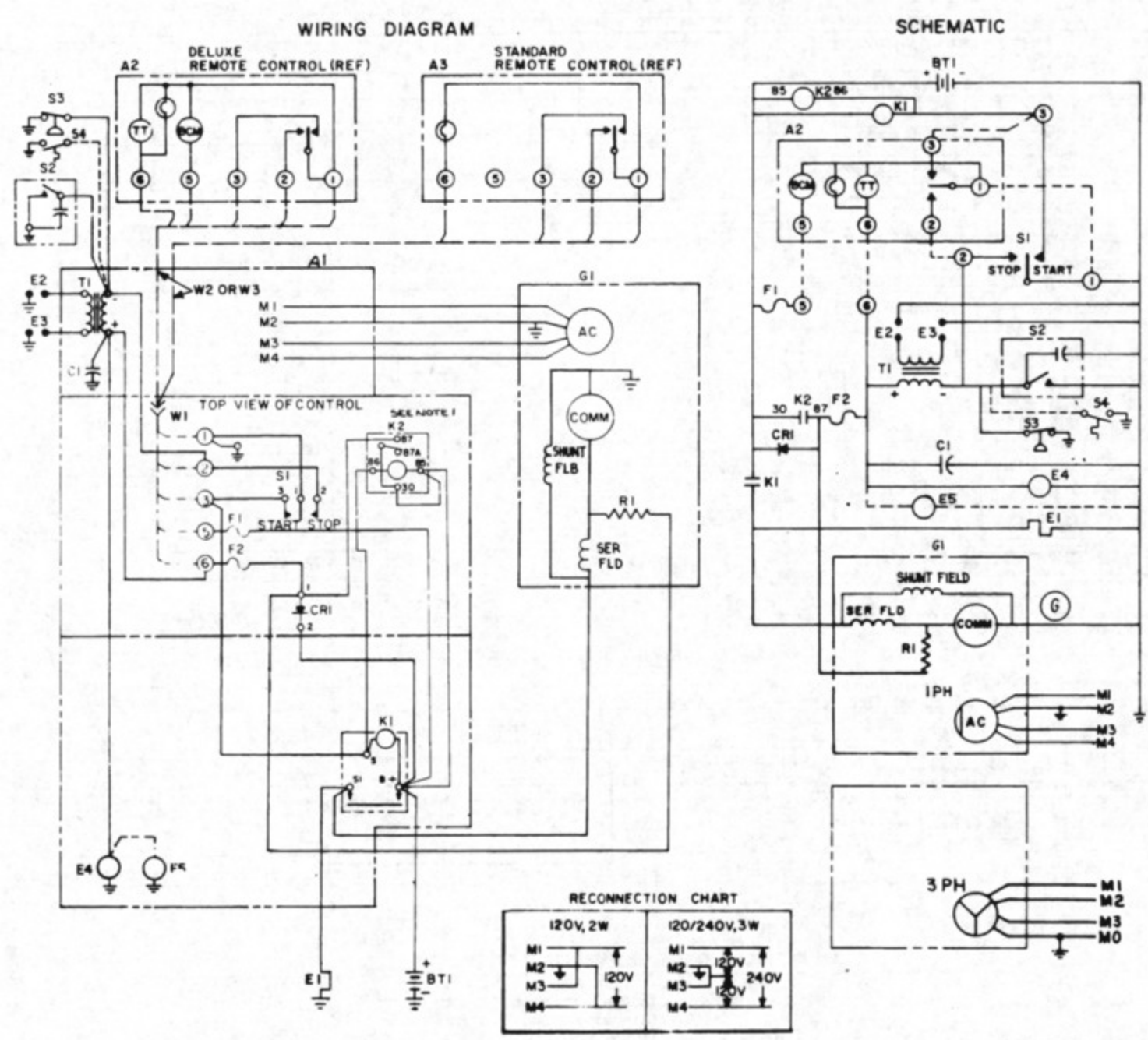

REF. DES.	QTY.	DESCRIPTION
A1	1	Control Assy - 01 -05
	1	Control Assy - 02
	1	Control Assy - 05
	1	Control Assy - 04
A2	1	Deluxe Remote Control
A3	1	Standard Remote Control
BT1	1	Battery 12 V
C1		Capacitor
CR1	1	Rectifier
E1	1	Choke - Onan
E2,E3	2	Spark Plug
E4	1	Fuel Pump
E5	1	Solenoid - Fuel (When Used)
F1,2	2	Fuse (5 Amp, 32 V)
G1	1	Generator
K1	1	Solenoid - Start
K2	1	Relay - Ignition
R1	1	Resistor - Fixed (BF)
	1	Resistor - Fixed (NH & CCK)
S1	1	Switch - Start-Stop
S2	1	Breaker & Cap Assy
S3	1	Switch - Low Oil Press
S4	1	Switch - High Air Temp
T1	1	Coil - Ignition
Option W1	1	Wiring Harness (Conn - Remote)
Option W2	1	Wiring Harness (Cable - Remote) Control) (10 Feet Long)
Option W3	1	Wiring Harness (Cable - Remote) Control) (30 Feet Long)

FIGURE 37. TYPICAL WIRING DIAGRAM - BF SPEC B AND NH SPEC J

OPERATION DESCRIPTION FOR BFA, BGA, AND NH (SPEC K-P)

This operation description applies to BFA, BGA, and NH (Spec K-P) series generator sets. The wiring diagrams are included as examples to help trace or isolate problems. However, always refer to the wiring diagram that corresponds to the model and spec number of the generator set when troubleshooting.

Starting

When switch S1 is closed to START (Figure 38), battery ground is connected through switch S1 to the start solenoid K1 and the crank ignition relay K2. Start solenoid relay K1 closes its normally open K1 contacts to connect battery positive to the cranking windings of the generator and to choke E1. The generator acts as a motor and cranks the engine. Ignition relay K2 closes its normally open K2 contacts to connect battery positive to the ignition coil T1, and fuel pump E4. This provides the ignition spark and pumps fuel to the carburetor.

Start Disconnect-Run

When the engine starts, oil pressure closes switch S3 which connects battery ground to the K3 run ignition relay. Generator voltage energizes the K3 relay which has two sets of contacts, one set normally open and the other set normaly closed. The normally open set of K3 contacts close to connect battery positive to the ignition coil and fuel pump. The normally closed K3 contacts open to disconnect battery positive from the K1 start solenoid.

De-energizing the K1 start solenoid opens the K1 contacts to disconnect battery positive from the cranking windings of the generator. The operator releases the start-stop switch which de-energizes the K2 crank ignition relay and opens the K2 contacts. The engine continues to run because battery positive is supplied to the fuel pump and ignition coil through the closed K3 contacts. Generator voltage is supplied to the electric choke heater E1 to open the choke. Generator voltage is also supplied through diode CR1 to charge the battery.

Stopping

Moving start-stop switch S1 to STOP grounds the K3 ignition relay causing it to de-energize and open the K3 contacts. Opening the K3 contacts disconnects battery positive from the ignition coil and fuel pump. When the engine stops, blocking diode CR1 prevents battery discharge through the generator.

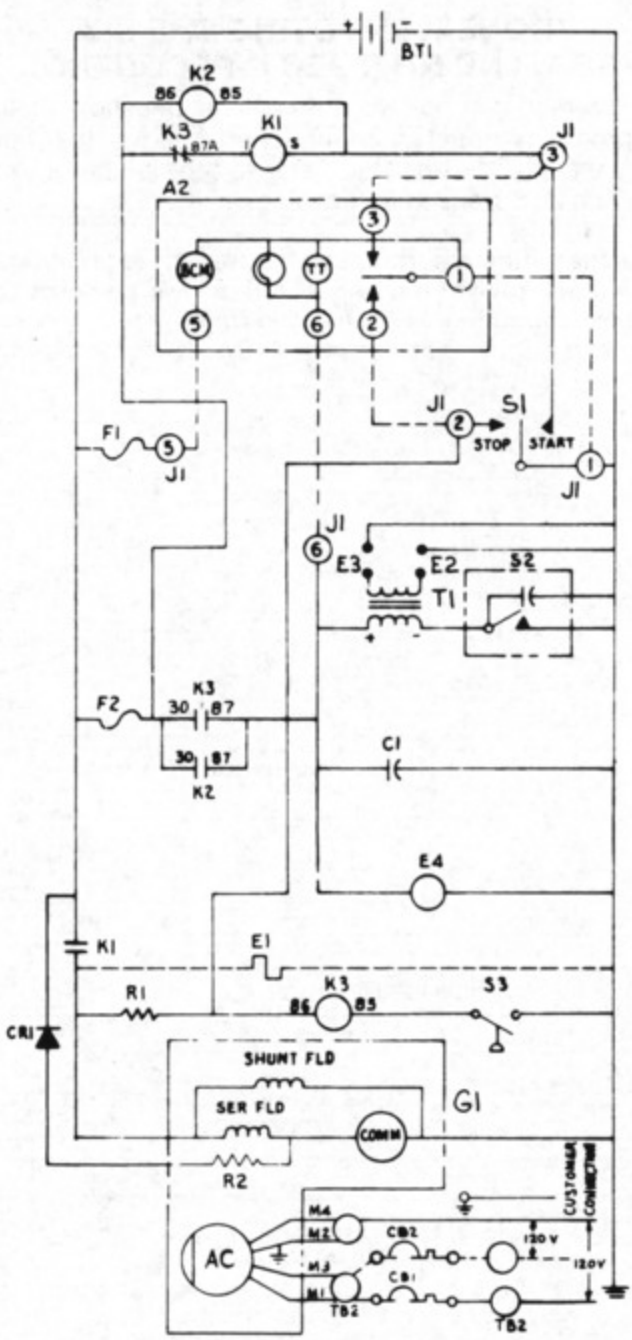

A2 .....Deluxe Remote Control
BT1 .....Battery
E1.....Electric Choke
E2,E3.....Spark Plug
E4.....Fuel Pump
G1 .....Generator
K1 .....Start Solenoid Relay
K2 .....Crank Ignition Relay
K3 .....Run Ignition Relay
R1,R2 .....Resistor
S1.....Start-Stop Switch
S2.....Breaker Points
S3.....Low Oil Pressure Switch
T1.....Ignition Coil
CB1,CB2 .....Circuit Breakers

FIGURE 38. TYPICAL SCHEMATIC AND PARTS IDENTIFICATION

TROUBLESHOOTING THE BFA, BGA, AND NH (SPEC K-P) CONTROL

To correct a problem, answer the question in the appropriate troubleshooting chart on the following pages either YES or NO. Refer to the number in that column and proceed to that step.

Use the wiring diagram (see Figure 40) for location of terminals, relays, etc. Figure 39 shows some of the control components for the generator sets.

The troubleshooting chart is divided into seven sections. Determine the problem and then refer to the chart (A, B, C, D, E, F, or G) for the troubleshooting procedures.

A. Engine does not crank.
B. Engine cranks but does not start.
C. Engine starts but stops when start switch is released.
D. Generator set is running — then stops.
E. Low battery — no charge rate.
F. Running Time Meter Inoperative.
G. Battery Condition Meter Inoperative.

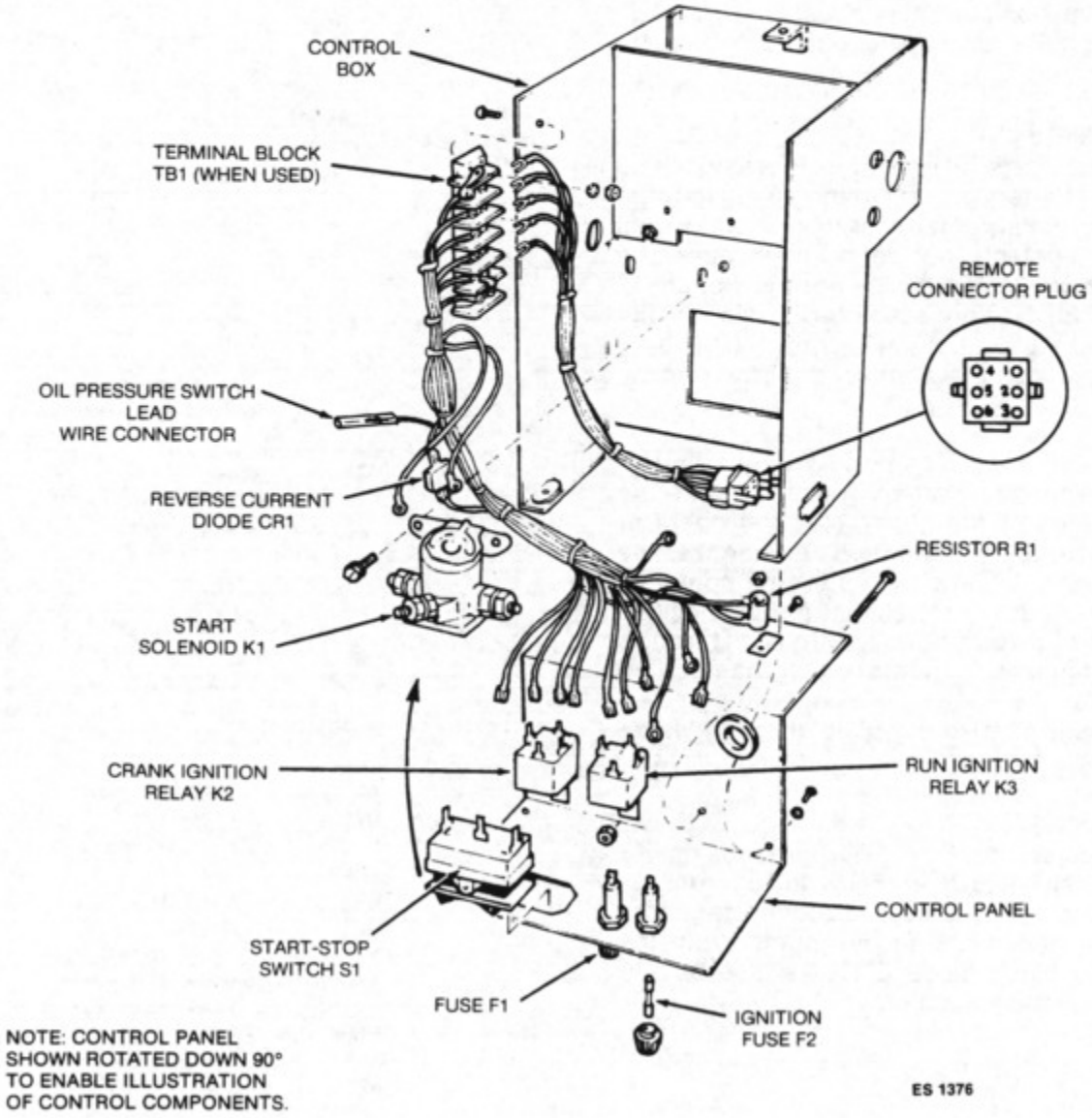

FIGURE 39. BGA, BFA, AND NH (SPEC K-P) CONTROL

A.	ENGINE DOES NOT CRANK	YES	NO
1.	Does engine crank at set but not at remote start panel?	2	4
2.	Check remote start control wires for continuity between the generator set and the remote start panel. Are control wires sized large enough to avoid excessive voltage drop?	4	3
3.	Replace control wires with correct wire gauge.	—	—
4.	Check condition of battery and terminal connections. Is battery fully charged and are all terminal connections clean and tight?	6	5
5.	Recharge battery and clean and tighten all terminal connections.	—	—
6.	Is battery voltage present between remote connector plug terminals 3 and 5 (between terminals TB1-3 and TB1-5 where applicable) when switch S1 is pushed to START? When the remote start switch is pushed to START? (Make certain fuse F1 is not open.)	8	7
7.	Replace start-stop switch S1 or remote start switch as required.	—	—
8.	Is battery voltage present between ground and K3 relay terminal 87A?	12	9
9.	Is fuse F2 open?	11	10
10.	Replace run ignition relay K3. (Contacts 87A-30 not closed.)	—	—
11.	Replace fuse F2.	—	—
12.	Is battery voltage present between K1 start solenoid terminal S1 and ground when start-stop switch S1 is pushed to START?	14	13
13.	Replace K1 start solenoid.	—	—
14.	Check generator brushes, commutator, DC armature windings, and DC field windings. See Generator Service Procedures section.	—	—

B.	ENGINE CRANKS BUT DOES NOT START	YES	NO
1.	Is battery voltage present between remote connector plug terminal 6 and ground when start-stop switch is pushed to START?	3	2
2.	Check all terminal connections on K2 crank ignition relay. If OK, replace K2 relay.	—	—
3.	Does the fuel pump operate during cranking?	6	4
4.	Check the fuel pump lead wire connections and repair or replace as necessary. Will pump operate?	—	5
5.	Refer to the Fuel System section for testing and service procedures.	—	—
6.	Is the choke closed? A small pointer on the choke shaft indicates if the choke is open or closed.	7	5
7.	Refer to the Ignition System section for testing and service procedures.	—	—

C.	ENGINE STARTS BUT STOPS WHEN START SWITCH IS RELEASED	YES	NO
1.	Does engine have correct oil level?	3	2
2.	Add oil as required.	—	—
3.	If oil level is OK, disconnect the low oil pressure switch lead wire. An insulated connector is spliced into this wire and is located within the control. After disconnecting the oil switch lead wire, ground the end that is connected to the control. Push the start-stop switch to START. Does the engine start and run?	4	5
	CAUTION ***To prevent engine damage from low oil pressure, make sure the engine builds up oil pressure to 30 psi (207 kPa) after starting. See Lubrication System section.***		
4.	Check low oil pressure switch operation. Switch should close when oil pressure builds up and open when oil pressure drops. Replace if necessary.	—	—
5.	Check low oil pressure lead wire for an open circuit and repair or replace as necessary. Reconnect oil pressure lead wire and push start-stop switch to START. Does engine start and run?	—	6
6.	Check wire connections between R1 resistor and K3 run ignition relay and between R1 resistor and K1 start solenoid. Check resistance of R1 resistor (see Parts Catalog for resistance value). Is R1 OK?	8	7
7.	Replace R1 resistor.	—	—
8.	Connect a jumper wire between remote connector plug terminals 5 and 6 (or TB1-5 and TB1-6 where applicable) and push start-stop switch S1 to START. (Make certain fuse F1 is not open.) Does engine start and run?	9	11
9.	Connect a voltmeter between remote connector plug terminal 6 and ground (or between TB1-6 and ground where applicable) and push start-stop switch S1 to START. Does voltmeter read 12 volts?	10	11
10.	Replace K3 run relay.	—	—
11.	Check generator brushes, commutator, DC armature, and field windings. Refer to Generator Service Procedures section.	—	—

D.	ENGINE IS RUNNING - THEN STOPS	YES	NO
1.	Check the set for low fuel level or low oil level and refill as necessary. Will set start and run without stopping?	—	2
2.	Check for low oil pressure or low oil pressure switch malfunction. See sections C3, C4, and C5 for troubleshooting procedures. Does this locate problem?	—	3
3.	Connect a voltmeter between remote connector plug terminal 6 and ground (or TB1-6 and ground if applicable) and push start-stop switch S1 to START. Is battery voltage present?	6	4
4.	Is fuse F2 open?	5	6
5.	Replace fuse F2.	—	—

D.	ENGINE IS RUNNING - THEN STOPS (Continued)	YES	NO
6.	Check for an open R1 resistor, an open connection between K3 run ignition relay and R1 resistor, or defective K3 run ignition relay. See sections C6 through C11 for troubleshooting procedures.	—	—
E.	**LOW BATTERY**	**YES**	**NO**
1.	Does battery charger show a normal charge rate of 1 to 1-1/2 amps?	2	3
2.	Check condition of battery. Generator set charger will not recharge a battery that is in a very low state of charge. Use a separate battery charger to bring battery up to full charge.	—	—
3.	Check wire connection between CR1 diode, K1 start solenoid, R2 resistor, and battery. Does this cause battery charger to show normal charge rate?	—	4
4.	Is CR1 diode shorted or open?	5	6
5.	Replace defective CR1 diode.	—	—
6.	Replace R2 resistor.	—	—
F.	**RUNNING TIME METER INOPERATIVE**	**YES**	**NO**
1.	Check wires between control terminal 6 and battery positive terminal for running time meter, and ground wire and connection to meter. Does this correct problem?	—	2
2.	Replace defective running time meter.	—	—
G.	**BATTERY CONDITION METER INOPERATIVE**	**YES**	**NO**
1.	Is fuse F1 open?	2	3
2.	Replace fuse F1.	—	—
3.	Check wire connections between remote connector plug terminal 5 (or TB1-5 where applicable) and the battery condition meter and between the battery condition meter and ground. Does this correct the problem?	—	4
4.	Use voltmeter to measure voltage between battery charge meter positive terminal and ground. Does voltmeter read battery voltage minus 10 volts?	6	5
5.	Replace defective zener diode.	—	—
6.	Replace defective battery condition meter.	—	—

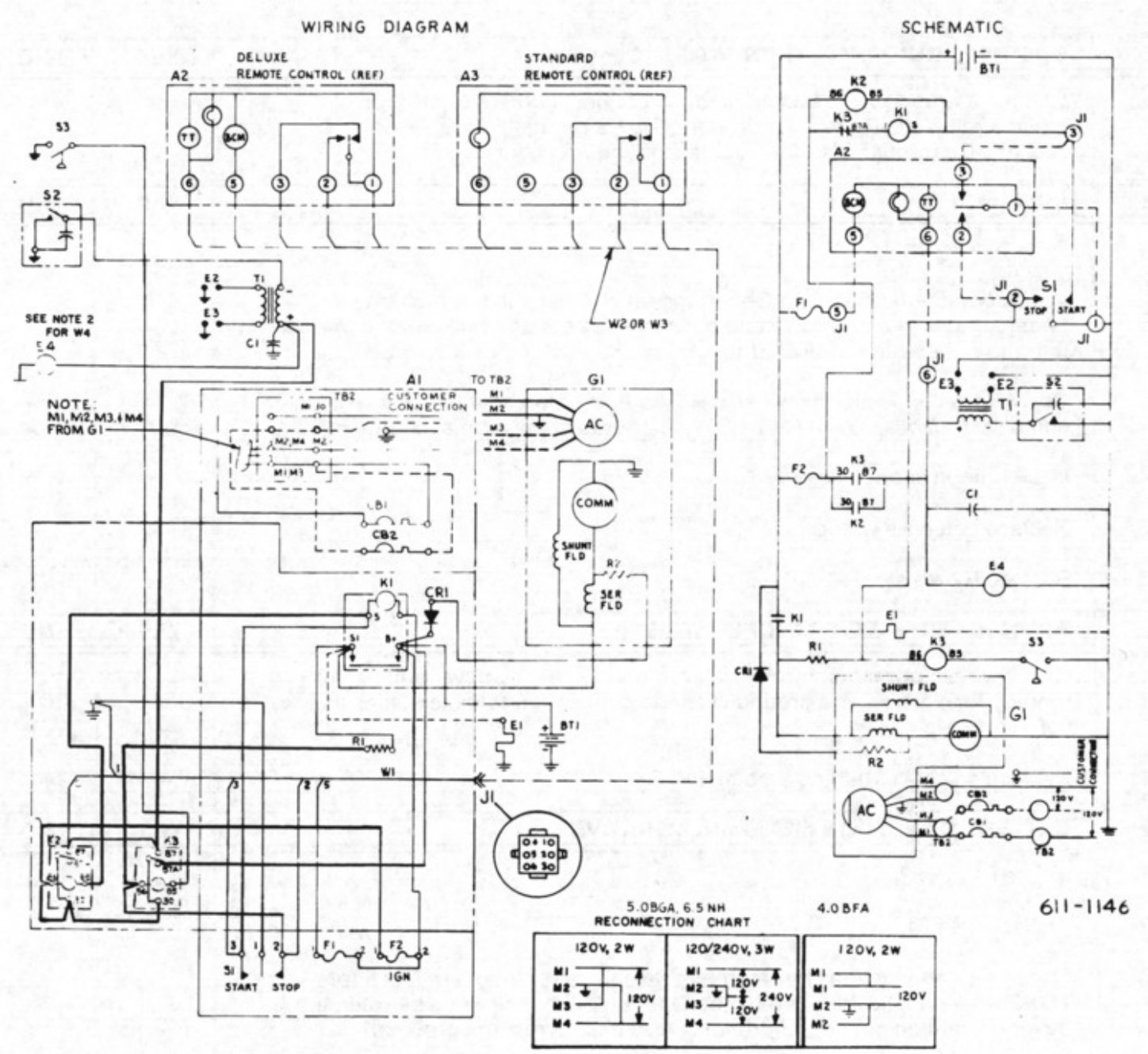

A1	Control Assy (-01) 30 Amp Control Assy (-02) (1) 20 & (1) 30 Amp Control Assy (-03) (2) 30 Amp Control Assy (-04) 30 Amp Control Assy (-05) (2) 30 Amp	R1	Resistor - 150 ohm 5W
A2	Deluxe Remote Control	R2	Resistor
A3	Standard Remote Control	J1	Socket Plug - Remote
BT1	Battery - 12 V	S1	Switch - Start Stop
C1	Capacitor	S2	Switch - Breaker & Cap Assy
CR1	Rectifier (Batt. Charging)	S3	Switch - Low Oil Pressure
		T1	Coil - Ignition
E1	Choke - Onan (Not Used w/LPG)	TB2	Terminal Board Silkscreens
E2,3	Spark - Plug		
E4	Fuel Pump or Shutoff/Filter - LPG	CB1,CB2	Circuit Breaker 30 Amp
		CB2	Circuit Breaker 30 Amp (-02)
F1, 2	Fuse Holder Fuse - 5 Amp 32 V	W1	Wiring Harness Conn Remote
		W2	Wiring Harness - Cable Remote Control 110 Feet Long
G1	Generator	W3	Wiring Harenss - Cable Remote Control - 130 Feet Long
K1	Start Solenoid	W4	Lead Assy (Shutoff/Fltr Only)
K2	Relay - Crank Ignition		
K3	Relay - Run Ignition		

FIGURE 40. TYPICAL WIRING DIAGRAM - BFA, BGA, AND NH (SPEC K-P)

Generator Troubleshooting Guide

GENERATOR TROUBLESHOOTING

A generator troubleshooting chart is provided to assist the serviceperson in diagnosing the cause of problems. Locate the trouble on the troubleshooting chart and investigate each of the possible causes indicated. Refer to the Generator Service Procedures section for required testing and service procedures.

TROUBLE	POSSIBLE CAUSE	CORRECTIVE ACTION
NO AC OUTPUT VOLTAGE	1. Blow fuse or circuit breaker (if used).	1. Look for cause and repair. Then replace fuse or reset circuit breaker.
	2. Disconnected wire or lead on brushes.	2. Reconnect wire or wires.
	3. Brushes not making contact with slip rings	3. Check brush springs for free movement or brushes which may be excessively worn.
	4. Open, grounded or short circuit in field or armature winding.	4. Test for open, grounded, or shorted windings. Repair or replace as necessary.
LOW AC OUTPUT VOLTAGE	1. External short circuit on line.	1. Locate and eliminate short circuit problem.
	2. Generator overloaded.	2. Remove part of load.
	3. Shorted or grounded circuit in field or armature winding.	3. Test for open, grounded, or shorted windings. Repair or replace as necessary.
	4. Engine not running properly causing generator to slow down.	4. Refer to Engine Troubleshooting Guide.
NOISY GENERATOR	1. Defective bearing in end bell.	1. Replace bearing.
	2. Brush rig loose.	2. Retorque.
	3. Armature and field frame rubbing together.	3. Check for generator misalignment and for varnish lumps between armature and field. Repair as necessary.
	4. Raised commutator bar or high mica condition.	4. Turn commutator on lathe; undercut mica insulation.

TROUBLE	POSSIBLE CAUSE	CORRECTIVE ACTION
GENERATOR OVERHEATS	1. Generator overloaded.	1. Remove part of load.
	2. Windings and parts covered with oil or dirt.	2. Clean generator.
	3. Air intake restricted or incoming air too hot.	3. Take necessary steps to allow for proper cooling.
	4. Shorted, open or grounded circuit in armature or field windings.	4. Test for open, grounded or shorted windings. Repair or replace as necessary.

GENERATOR DISASSEMBLY

In most cases, the generator set will have to be removed from the coach (see Set Removal section) before the generator can be disassembled. However, depending on the available space, it might be possible to remove certain components such as the brush rigs without removing the set from the coach. When disassembly is necessary, proceed as specified. Figure 41 shows a typical generator parts breakdown.

1. Remove the generator fan cover and end bell wrapper.
2. Remove the generator fan, mounting nut, and lock washer.
3. Disconnect all the generator wires and load wires from the brush rigs.
4. Remove the brush rig mounting screws; and then carefully lift out the brush rigs to avoid damaging the brushes. Make note of the location of each brush rig since they must be replaced in the same location in the end bell.
5. Remove the four through bolts that hold the adapter, frame assembly, and end bell together.
6. Separate the end bell from the frame assembly by lightly tapping around the end bell with a plastic hammer. If the end bell will not separate, use two screwdrivers (placed at opposite corners and inserted between the end bell and frame) to carefully pry the end bell loose. Apply light pressure equally and evenly around the end bell to avoid distorting any components.

CAUTION ***Do not push the screwdriver into the frame assembly windings or the winding insulation may be damaged.***

7. Remove the generator load wires from the slot in the top of the frame assembly.
8. Separate the frame assembly from the generator-to-engine adapter using the same procedure covered in Step 6. Do not let the frame assembly windings drag on the armature or the insulation may be damaged.
9. To remove the armature, strike the armature on the laminations with a lead hammer. Rotate the armature after each blow. Slide the armature off the through stud when loose.

CAUTION ***The armature windings, commutator, slip rings, or bearing will be damaged if struck. Strike armature only on the laminations.***

10. Remove the armature through stud from the engine crankshaft.
11. Remove the adapter mounting screws and remove adapter from the engine.

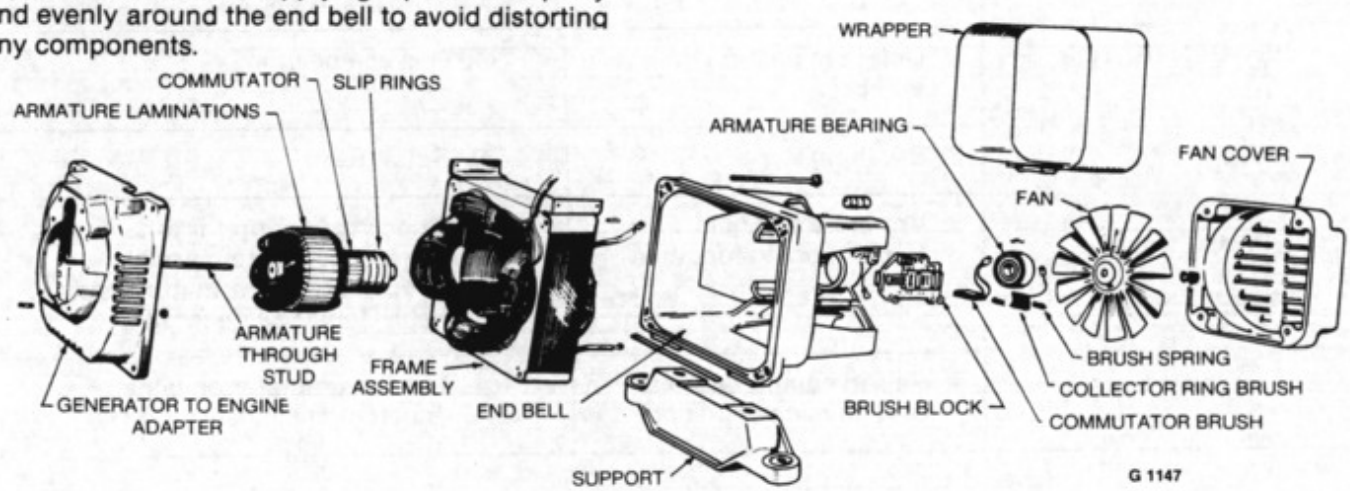

FIGURE 41. TYPICAL GENERATOR PARTS BREAKDOWN

GENERATOR SERVICE PROCEDURES

Use the following service or test procedures as specified in the troubleshooting chart.

Brush Replacement

Install new brushes when the old ones are worn to the dimensions shown. Replace brush springs if damaged or if proper tension is questionable.

1. Remove the generator end bell wrapper to expose the brushes.
2. Measure the brush wear (see Figure 42).
3. Remove the three screws holding each brush block in place.
4. Remove old brushes and clean holders so new brushes can move easily in their holders.
5. Install new brushes.

CAUTION ***Always use correct Onan brush (correct number given in parts catalog). Never substitute a brush which appears to be the same, for it may have different electrical characteristics.***

6. Install brush blocks and generator end bell wrapper.

New brushes are shaped to fit and seldom need sanding to fit properly. If some brush sparking does occur, run the generator set with a light load until the brushes are properly seated.

Slip Rings and Commutator

If slip rings are grooved or pitted, remove the armature and refinish the slip rings in a lathe (see next section for procedure). If the commutator appears rough or scored, refinish it at the same time.

CAUTION ***Shield the bearing during refinishing to prevent damage.***

The commutator gradually wears with use. If the proper brushes are used, and they are replaced at proper intervals, wear occurs slowly and evenly. Under dusty conditions or if the wrong brushes are used, wear occurs faster. Improper or excessive cleaning with sandpaper can cause the commutator to become grooved or out of round. If this condition exists, refinish it in a lathe (see next section for procedure).

BRUSH WEAR LIMITS

CONDITION	DC	AC
NEW	5/8" (15.8 mm)	11/16" (17.5 mm)
1/2 WEAR	13/16" (20.6 mm)	7/8" (22.2 mm)
REPLACE	1" (25.4 mm)	1-1/16" (26.9 mm)

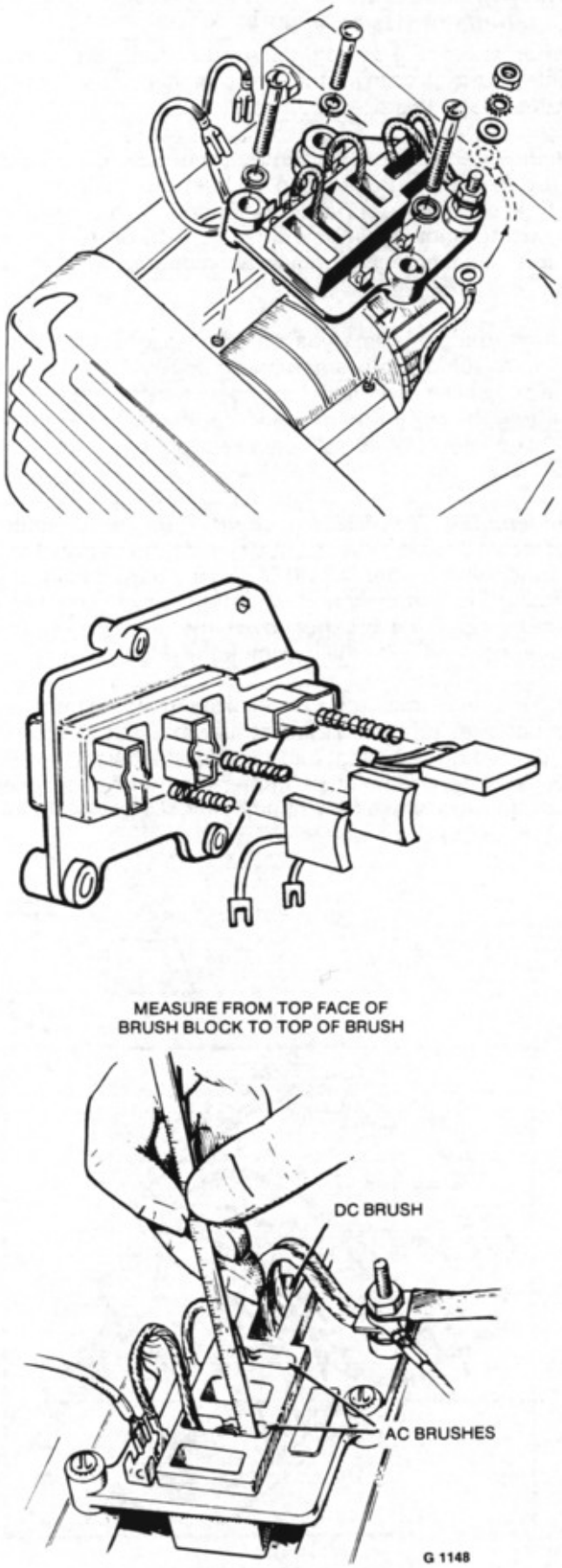

FIGURE 42. BRUSH BLOCKS

Turning Slip Rings or Commutator (Using a lathe)

When a slip ring or commutator becomes grooved or pitted, turn it true in a lathe. Any qualified lathe operator can perform this operation easily.

Remove armature and center accurately on a lathe. Turn the commutator or slip ring just enough to provide a true, concentric surface. Tool marks can be removed by using number 240 sandpaper. Do not use emery paper. The emery particles are conductive and will cause shorts.

After turning the slip rings, cut a very slight chamfer on them to remove burrs and sharp edges. This reduces the possibility of a "flash-over" between the rings. After turning the commutator, undercut the mica insulation between the commutator bars as described in the next section.

Undercutting the Mica Insulation: When the commutator wears down so that the mica insulation between any bars comes in contact with the brushes, it causes the brushes to jump, spark, operate noisily, and wear rapidly. Sparking brushes lower the efficiency of the generator and burn the commutator (Figure 43).

When a "high mica" condition exists or after commutator has been turned on a lathe, mica insulation requires undercutting. A typical tool for this is shown in Figure 43. To undercut the mica, center the cutting tool over the mica and with a firm, steady pull, draw the tool the length of the commutator.

CAUTION ***The undercutting tool can damage the slip rings if used carelessly. Be careful not to draw it across the slip rings.***

Repeat the cutting operation until the mica has been cut down to approximately 1/32 inch (0.8 mm) below the surface of the commutator. Proceed to the next section until all are equally undercut. If any burrs are present along the edges of the bars, carefully remove them. This is done by holding apiece of number 240 sandpaper against the commutator with a flat piece of wood while the commutator is turning rapidly. Before putting the armature back into service, be sure to blow or brush all mica dust, metallic particles, etc. from the commutator grooves and surface.

Testing Armature AC Windings For Continuity

Use a continuity tester (buzzer or light) or ohmmeter to test the AC armature windings for continuity. Place the test prods on the slip rings as shown in Figure 44. There should be continuity between slip rings M1-M2 and M3-M4. There should be no continuity between M2-M3.

No continuity between M1-M2 or M3-M4 indicates an open AC winding. Continuity between M2-M3 indicates a shorted AC winding. Replace the armature if either condition exists.

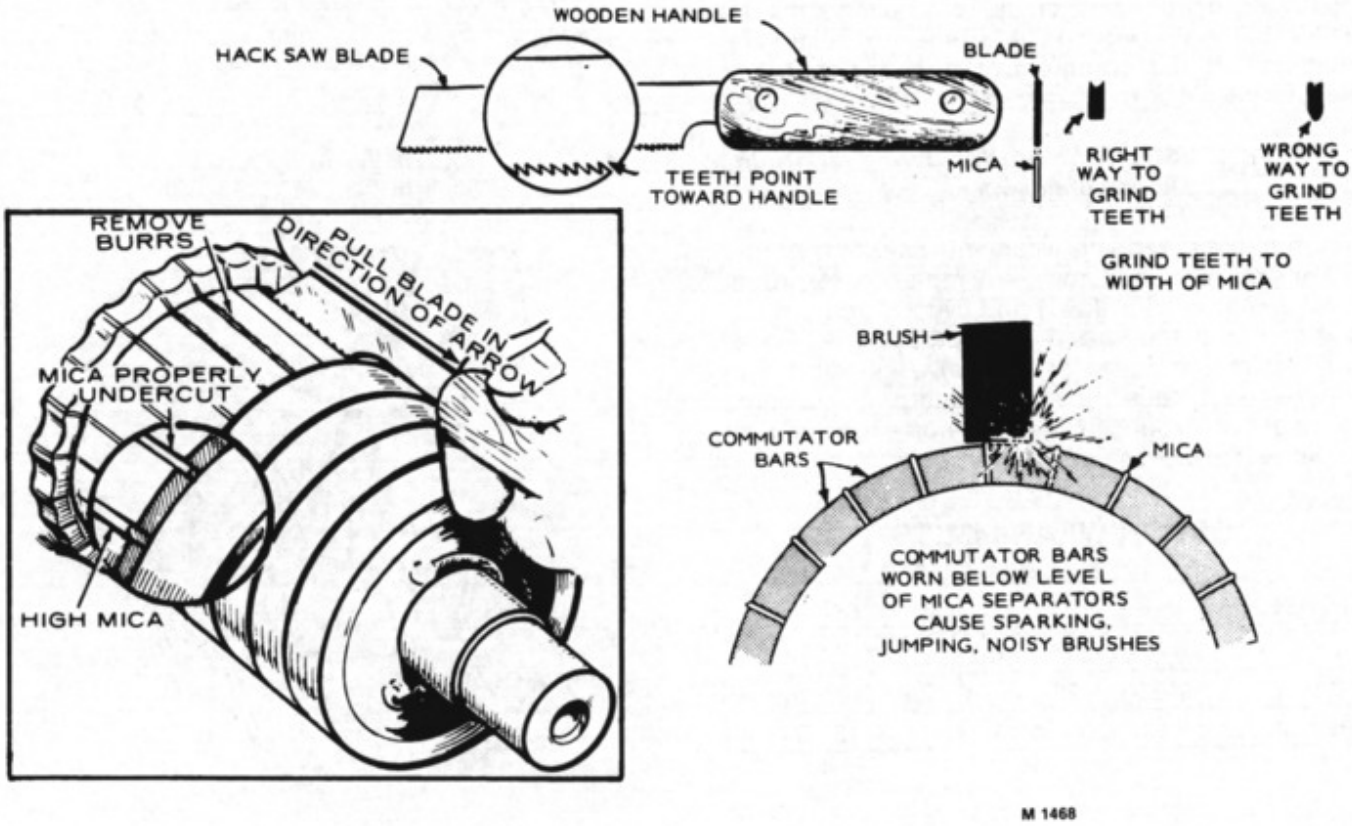

FIGURE 43. UNDERCUTTING MICA INSULATION

TABLE 5
SINGLE-PHASE ARMATURE RESISTANCES

VOLTAGE	kW	*RESISTANCE
120/240	6.5	0.15 ohms
120/240	5.5	0.25 ohms
120/240	5.0	0.141 ohms
120	4.0	0.27 ohms
120/240	4.0	0.39 ohms

*Values shown are for reference only.

The resistance values for the armature AC windings are shown in Table 5. These values are too small to be measured accurately with an ohmmeter. They are only shown to indicate that the armature resistance is very small. An ohmmeter reading that shows high resistance in the AC windings indicates a defective armature.

Testing DC Armature Windings For Continuity

Use a continuity tester (buzzer or light) or ohmmeter to test the DC armature windings for continuity. Place a test prod on one of the commutator bars and hold it there. Touch the other test prod to each of the other bars, working completely around the commutator. There should be continuity between the commutator bar with the stationary test prod and all other commutator bars. If there is no continuity or high resistance when a commutator bar is tested, an open DC winding is indicated. Replace the armature.

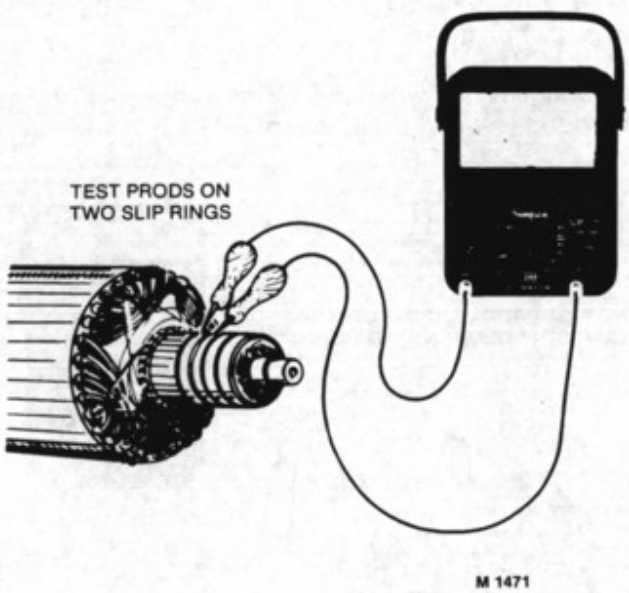

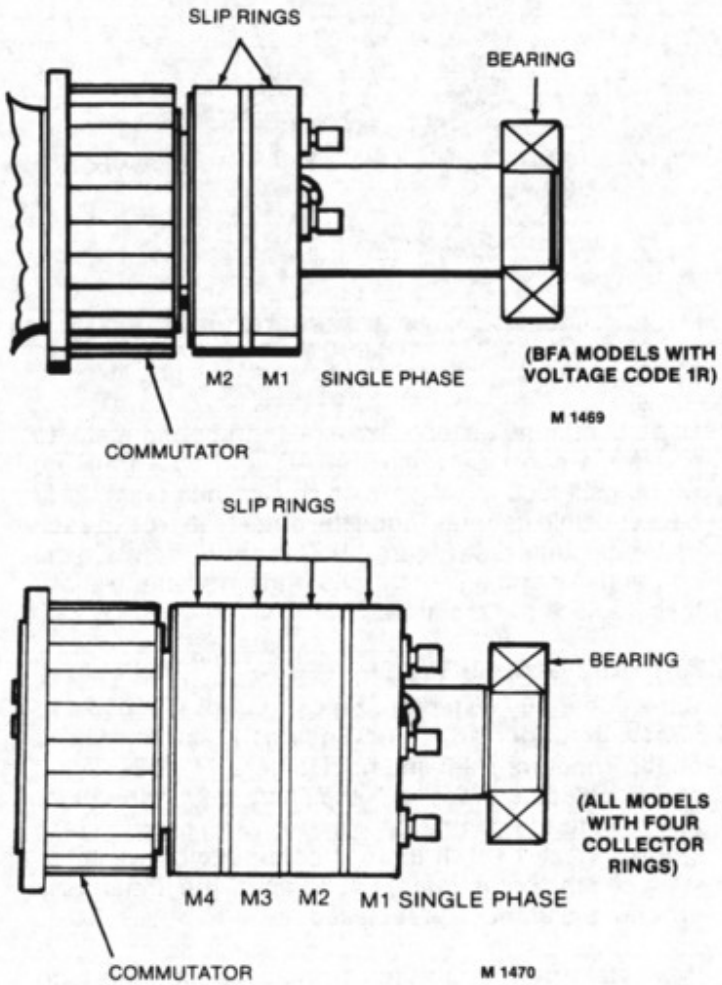

FIGURE 44. ARMATURE AC OPEN TEST

Armature Short Circuit Test

To test for a short circuit, place the armature in a growler (Figure 45). With the growler current on, hold a steel strip about 1/2 inch (13 mm) above the armature laminations. Pass the strip back and forth over the lamination. Cover as much of the lamination area as possible. If the strip vibrates when passed over the armature, a short is indicated.

After testing in one position, rotate the armature slightly in the growler and repeat the test. Continue until you complete a revolution of the armature in the growler. Replace a short circuited armature with a new one.

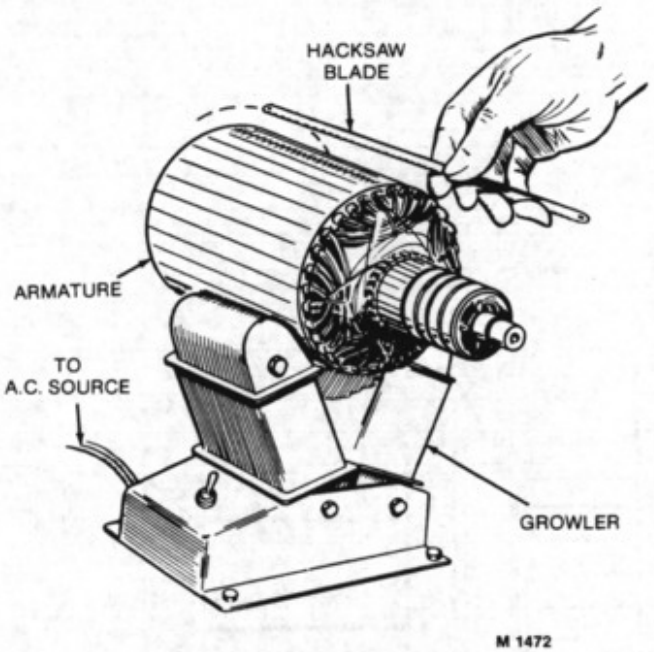

FIGURE 45. ARMATURE SHORT CIRCUIT TEST WITH GROWLER

Use a continuity tester (buzzer or light) or ohmmeter to test for a short between the AC and DC armature windings. Place a test prod on one of the commutator bars and hold it there. Touch the other test prod to each of the slip rings (see Figure 46). Continuity between the commutator and any of the slip rings indicates a short. If so, replace the armature.

Armature Ground Test

Use a continuity tester (buzzer or light) or ohmmeter to test for grounded armature windings. Place a test prod on the armature shaft and hold it there. Make sure that good contact is made with the shaft. Touch the other test prod to the commutator and to each slip ring (see Figures 47 and 48). If there is continuity between the shaft and the commutator or slip rings, the armature is grounded and must be replaced.

If available, perform this test using a megger. The high voltage potential created during megger testing will often detect an insulation breakdown that cannot be detected with a low voltage testing device.

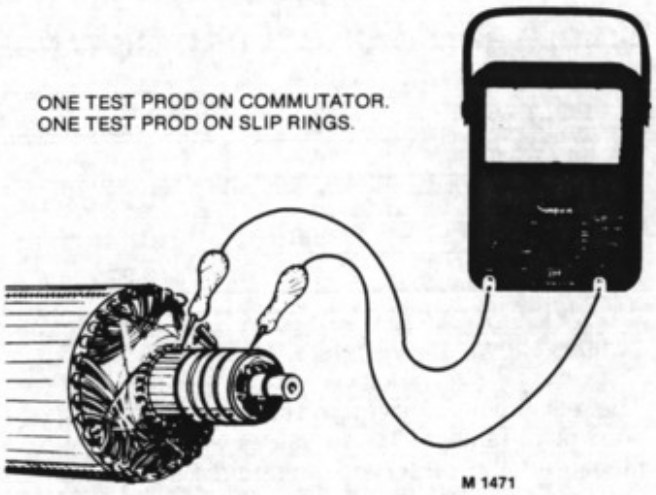

FIGURE 46. AC TO DC SHORT CIRCUIT TEST

Field Winding Voltage Test

Use a voltmeter to check the generator field voltage. Normal field voltage during no-load operation should be 27 to 33 volts DC. To connect the voltmeter, remove the wrapper from the end bell. With the generator set stopped, connect the negative (−) lead to the top commutator brush lead which goes to ground and connect the positive (+) lead to the commutator brush lead on the left. Start the generator set and note DC field voltage. Stop the generator set, remove the voltmeter lead from the brush on the left side and connect it to the other commutator brush lead on the right side. Restart generator set and again check DC voltage. Stop generator set when finished.

If the voltage is not within the normal range, perform a field ground test and a field open test.

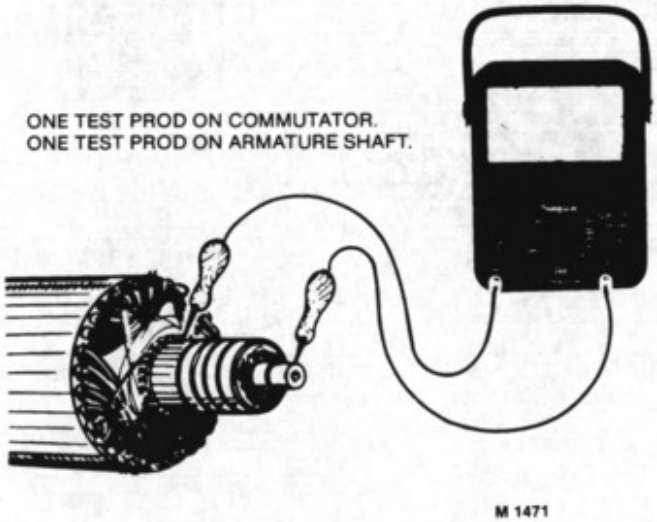

FIGURE 47. ARMATURE DC GROUND TEST

Field Ground Tests

The following test can be performed without disassembling the generator. Disconnect the field coil leads from their terminal points on brush blocks and disconnect S1 terminal from the start solenoid.

Use a continuity tester (buzzer or light) or ohmmeter to test for grounded field windings. Place a test prod on a clean, paint-free, part of the frame. Make sure that good contact is made with the frame. Touch the other test prod to stator leads S1, S2, F1, and F2 (see Figure 49). If there is continuity between the frame and any of the stator leads, the field winding is grounded. If the problem is an external lead between coils or a coil lead, repair as required. If the problem lies within a coil, the complete stator assembly must be replaced.

If available, perform this test using a megger. The high voltage potential created during megger testing will often detect an insulation breakdown that cannot be detected with a low voltage testing device.

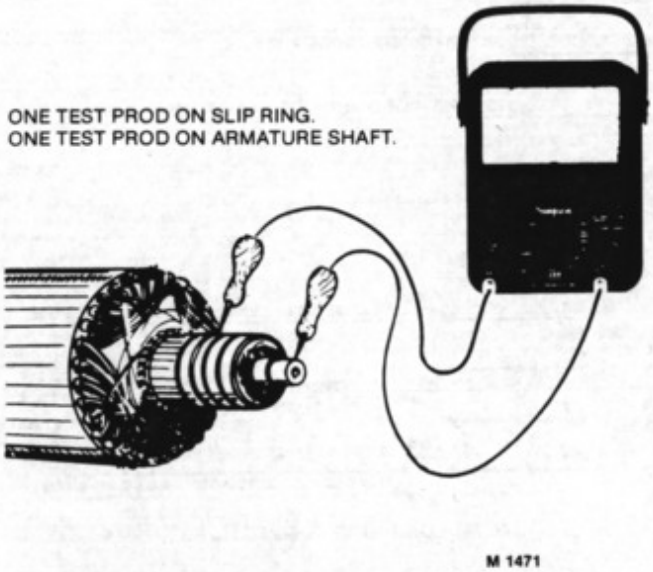

FIGURE 48. ARMATURE AC GROUND TEST

Field Open Tests

The following test can be performed without disassembling the generator. Disconnect the field coil leads from their terminal points on brush blocks and disconnect S1 terminal from the start solenoid.

Use a continuity tester (buzzer or light) or ohmmeter to test the stator field windings for an open circuit. Test for continuity between stator leads S1-F2, S1-S2, and S1-S3. No continuity indicates an open field winding. If the problem is an external lead between coils or a coil lead, repair as required. If the problem lies within a coil, replace the complete stator assembly.

The resistance values for the stator windings are shown in Table 6. Most of these values are too small to be measured accurately with a standard ohmmeter. The stator windings can be checked with a Wheatstone bridge or a digital meter capable of making milliohm (one-thousandth of an ohm) resistance measurements. A high resistance reading of the stator windings would indicate that the stator is defective.

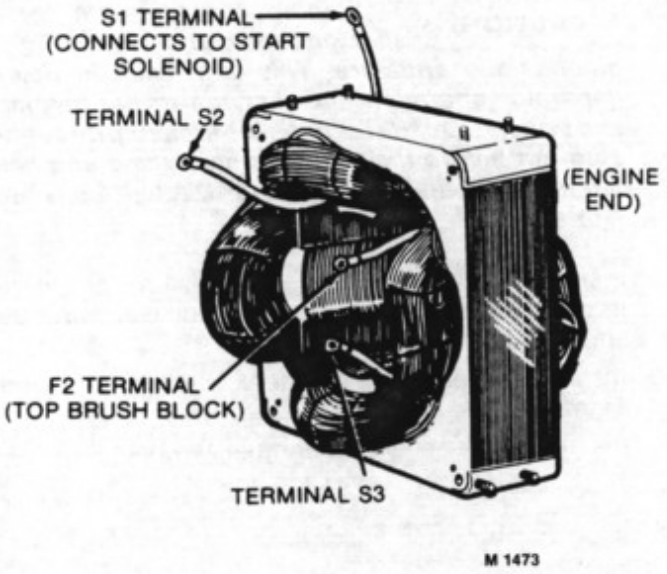

FIGURE 49. STATOR ASSEMBLY

TABLE 6. STATOR WINDING RESISTANCES*

GENERATOR SET	SHUNT WINDING	SERIES WINDING
BF	1.82	0.019
BFA	1.62	0.019
BGA	1.48	0.014
NH	0.93	0.011

*Values in ohms are ±7% at 77°F (25°C).

GENERATOR ASSEMBLY

1. Inspect all mating surfaces before assembling the generator. Clean off any dirt and file flat any nicks that could cause misalignment.
2. Install the generator adapter to the engine and tighten securely.
3. Install the armature through-stud in the engine crankshaft.
4. Slide the armature over the through-stud and into position against the crankshaft.
5. Install the frame assembly, being careful not to drag the field windings on the armature. Make sure the stator leads are oriented as shown in Figure 49.
6. Coat the bearing bore in the end bell with a light layer of molykote grease. Position the load leads between the frame assembly and end bell; then install the end bell. Note that the tab on the bearing must be aligned with the slot in the bearing bore.
7. Install the four generator through-bolts, locking washers, and nuts; and tighten to specified torque. Note that no lock washer is used on the bolt for the upper left side of the end bell (viewed from bearing end).

CAUTION ***Tightening the armature thru-stud too soon can cause misalignment of the armature. This can result in noisy generator operation and damage to the bearing and brushes. Do NOT tighten the armature through-stud-nut before the frame assembly and end bell are mounted and the generator through-bolts are tightened.***

8. Install the brush rigs in the same position they were in prior to removal; then connect the lead wires as shown in Figure 50.
9. Install the generator fan, lock washer, and nut. Tighten to the specified torque.
10. Install the fan cover and end bell wrapper.

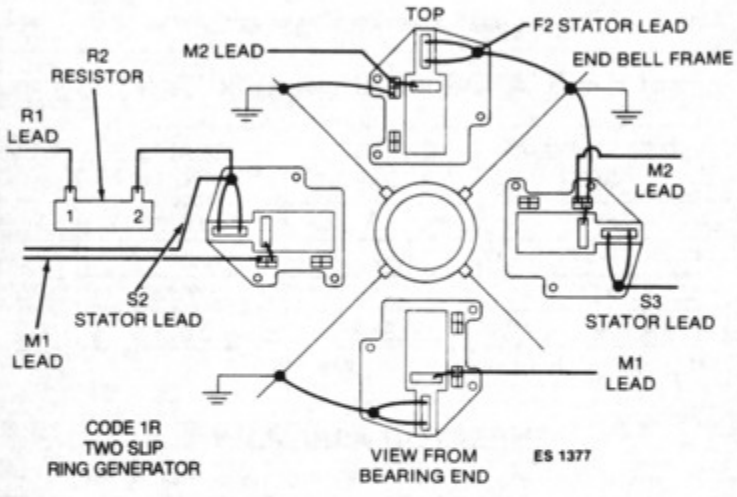

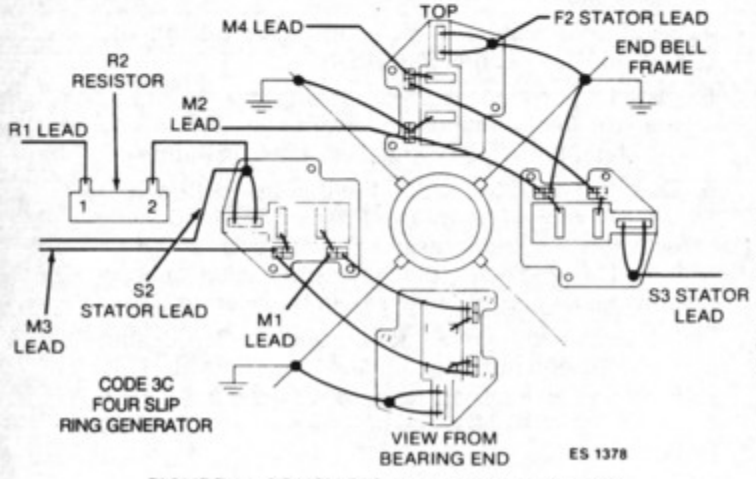

FIGURE 50. BRUSH RIG LEAD CONNECTIONS

LOAD WIRE CONNECTIONS

Single phase voltage code 3C generators may be connected for 120 volt or 120/240 volt service (see Figure 51). Use the connection for 120 volt, two wire service when one load exceeds one-half the rated capacity. Overloading can damage the generator windings. When two circuits are used, divide the load equally between them.

Single phase voltage code 1R generators should be connected as shown in Figure 52.

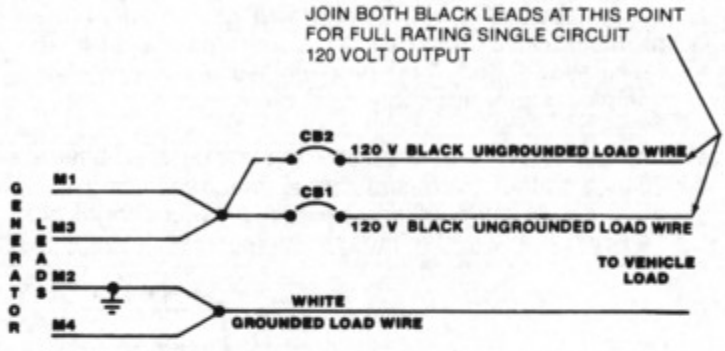

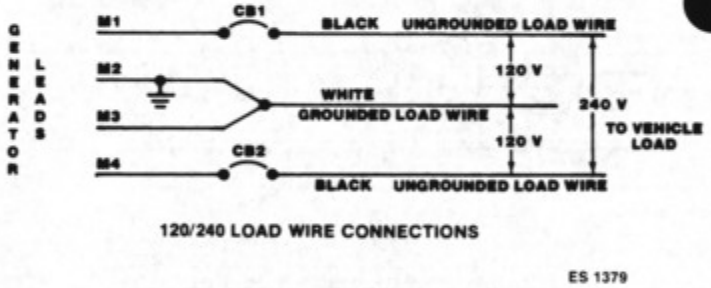

FIGURE 51. SINGLE-PHASE, "-3C" VOLTAGE CODE GENERATOR CONNECTIONS

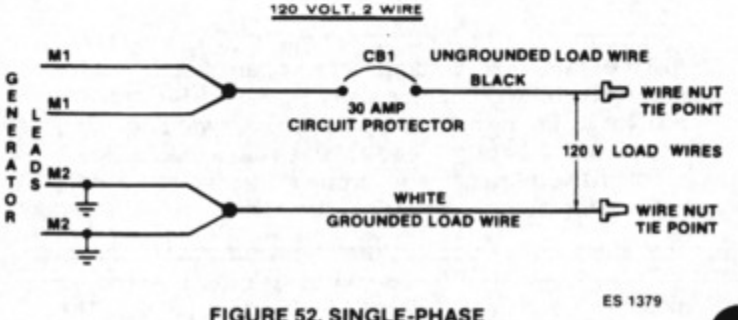

FIGURE 52. SINGLE-PHASE "1R" VOLTAGE CODE GENERATOR CONNECTIONS

Engine - Block Assembly

GENERAL

The engine block assembly includes the pistons and connecting rods, crankshaft, camshaft, valves and lifters, cylinder heads, lubrication system, timing gears, governor mechanism, bearings, and cylinder block. Performing any major service on the block assembly will require that the generator set be removed from the coach (see Set Removal section). In addition, to gain complete access to the block assembly, the control, generator, and all primary engine systems must also be removed. Refer to the previous sections for the disassembly and removal procedures.

OIL FILTER AND ADAPTER

Open the oil drain valve and drain the crankcase oil. Remove the filter (see Figure 53) by turning counterclockwise with a filter wrench. The low oil pressure cut-off switch is installed in a threaded hole in the filter adapter and may be removed if required. Loosen the two capscrews that secure the adapter to the engine block and remove the adapter and gasket.

Assembly is the reverse of disassembly. Use a new adapter gasket and install so the two small oil holes are aligned with the oil holes in the block. Gasket should be installed dry. Coat the threads of each capscrew with non-hardening sealer and tighten to recommended torque.

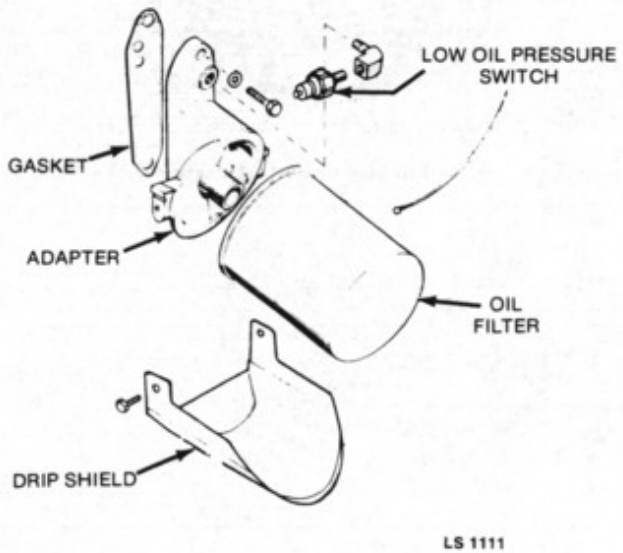

FIGURE 53. OIL FILTER AND ADAPTER

CYLINDER HEADS

Remove the cylinder heads for cleaning when poor engine performance is noticed. Use the following procedures to service.

1. Use a 1/2 inch socket wrench to remove the cylinder head bolts or stud nuts and lift off the head.

CAUTION ***Warpage might occur if the heads are removed while hot. Wait until engine has cooled before removing heads.***

2. After removing heads, clean out all carbon deposits. Be careful not to damage the outer sealing edges where gaskets fit. The heads are made of aluminum and can be damaged by careless handling.
3. Use new head gaskets and clean both the heads and the cylinder block thoroughly where the head gaskets rest.
4. Place heads in position and follow head torque tightening sequence shown in Figure 54. Start out tightening all bolts to 5 ft. lb (7 N•m), then 10 ft. lb (14 N•m), etc., until all bolts or stud nuts are tightened to the specified torque (see Specifications section).
5. Retorque before engine has run a total of 25 hours.

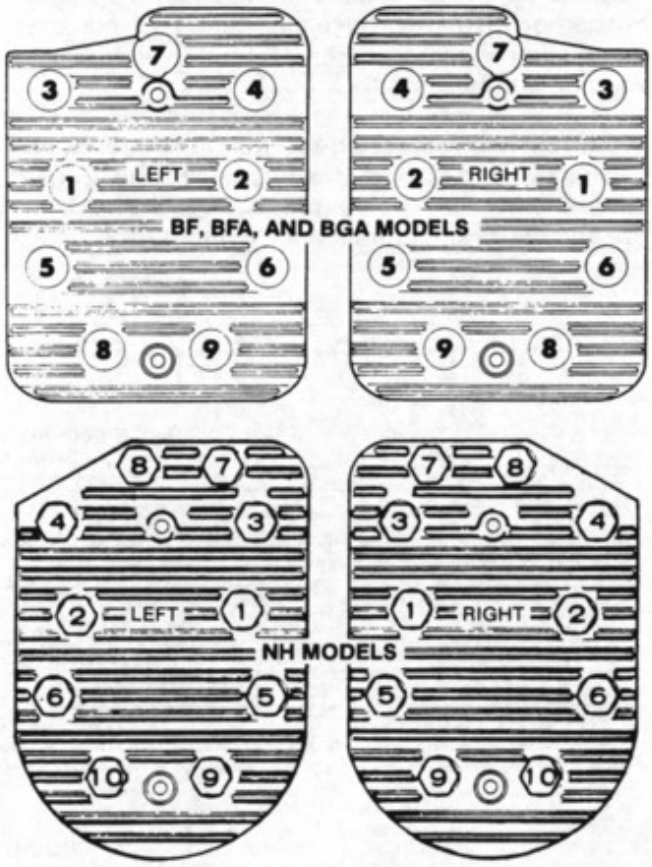

FIGURE 54. CYLINDER HEAD TIGHTENING SEQUENCE

VALVE SYSTEM

A properly functioning valve system is essential for good engine performance. All B and N series generator sets utilize an L-head type valve design as shown in Figure 55. Access to the valve system can be obtained by removing the cylinder heads and the valve covers on top of the engine. A valve spring compressor must be used to remove valves (see Figure 56) from the cylinder block. Use the following procedures to inspect and service the valve system.

Inspection

Valve Face: Check the valve face for evidence of burning, warpage, out-of-round, and carbon deposits (Figure 57).

Burning and pitting are caused by the valve failing to seat tightly. This condition is often caused by hard carbon particles on the seat. It may also be due to weak valve springs, insufficient tappet clearance, warpage, and misalignment.

Warpage occurs chiefly in the upper stem due to its exposure to intense heat. Out-of-round wear follows when the seat is pounded by a valve whose head is not in line with the stem and guide. If a valve face is burned or warped, or the stem worn, install a new one.

Too much clearance in the intake guide admits air and oil into the combustion chamber, upsetting carburetion, increasing oil consumption, and making heavy carbon deposits. Carbon prevents heat dissipation. Clean metal is a good heat conductor but carbon insulates and retains heat. This increases combustion chamber termperatures which causes warping and burning.

Unburned carbon residue gums valve stems and causes them to stick in the guide. Deposits of hard carbon with sharp points projecting become white hot and cause preignition and "pinging".

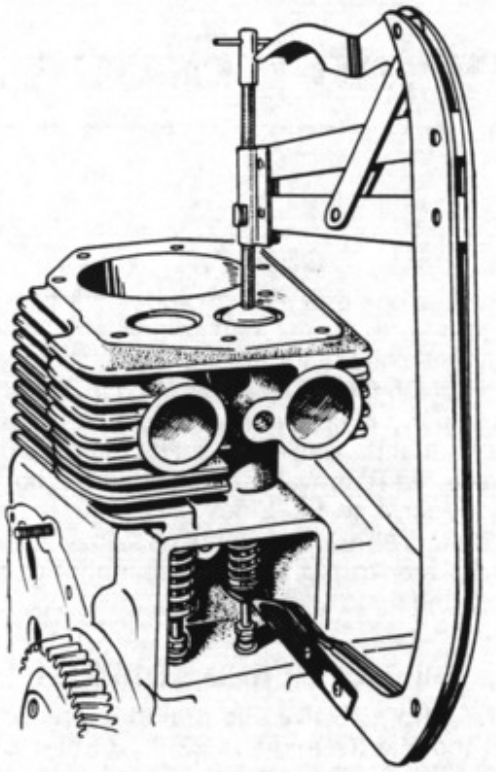

VT 1018

FIGURE 56. VALVE SPRING COMPRESSOR

Stems And Guides: Always check valve stems and guides for wear as shown in Figure 58. Use a hole gauge to measure the valve guide. When clearance with stem exceeds original clearance by 0.002 inch (0.05 mm), replace either valve or guide or both, as may be necessary. Always regrind seat to make concentric with the newly installed guide.

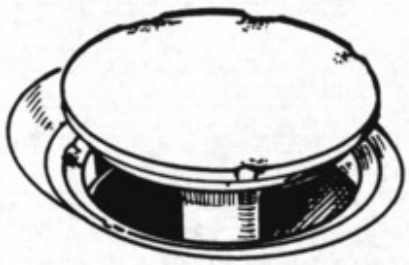

VT 1017

FIGURE 57. VALVE FACE

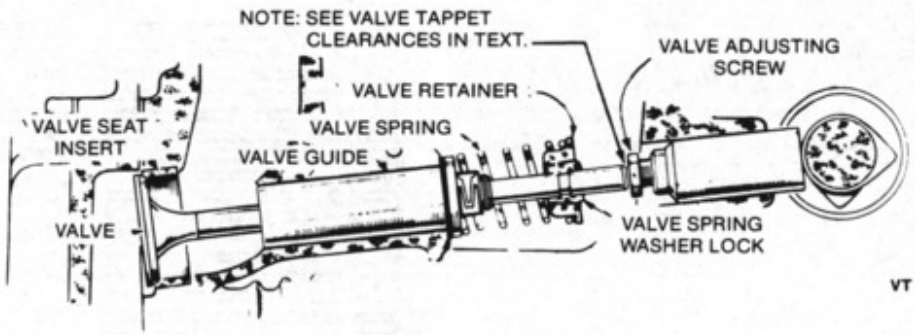

VT 1019

FIGURE 55. VALVE SYSTEM

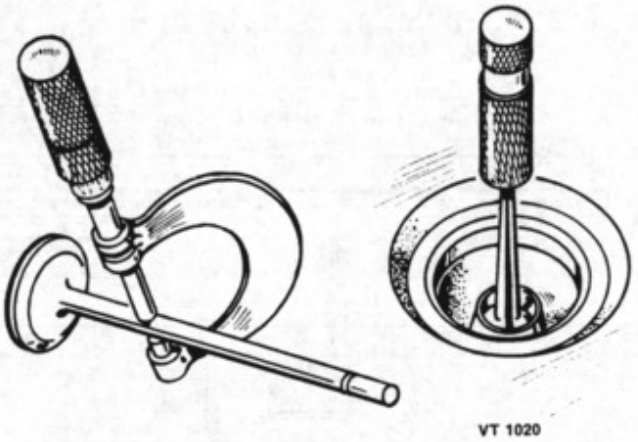

VT 1020

FIGURE 58. VALVE STEM AND VALVE GUIDE INSPECTION

Valve Springs: Test the valve springs for uniform strength (see Specifications). Use a valve spring tester for accurate check — or place springs on end on a level surface (see that spring ends are flat) and use a straight edge to determine irregularity in height. Unequal or cocked valve springs will undo in the assembled job all the precision that has been put into it. Spring tension too weak allows valves to flutter. Spring tension too heavy causes "stretched" valves. Either condition aggravates wear on valve and seat with possible valve breakage.

Replace valve springs not within specifications.

Reconditioning Valves And Valve Seats

The interference angle method of valve seating is used on all B and N series generator set engines. With this method, different seat and face angles are used and line contact between the valve face and seat occurs.

The valve *face* angle is 44 degrees. The valve *seat* angle is 45 degrees. This 1-degree interference angle results in a sharp seating surface between the valve and the top of the valve seat (see Figure 59).

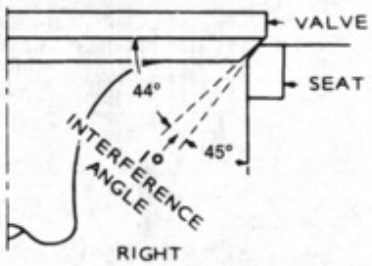

VT 1021

FIGURE 59. VALVE INTERFERENCE ANGLE

The valves should not be hand lapped because the sharp contact will be destroyed. This is especially important where chrome cobalt faced valves and seats are used. Valve faces must be finished in a machine to 44 degrees.

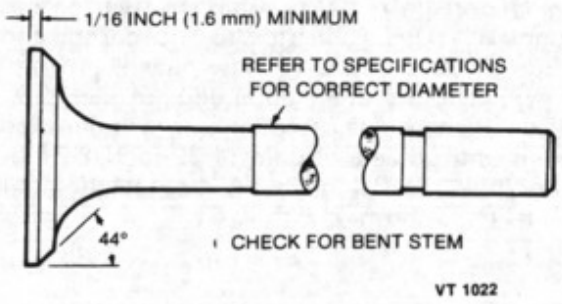

VT 1022

FIGURE 60. VALVE MARGIN

Every valve must have a minimum of 1/16 inch (1.6 mm) margin, Figure 60. If the valve has less margin than this, it will heat up excessively. It will retain that heat during the compression stroke and preignite the mixture, causing loss of power and economy. This valve is also susceptible to warping and breakage.

Not all valves can be reconditioned. A badly warped valve must be replaced because the excessive grinding required to make it seat correctly removes the margin. To make a valve gas tight, every trace of pitting must be removed from the valve face and seat. Deeply pitted or cut valves must be replaced because the grinding removes the margin.

Valve seats should be ground with a 45-degree stone and the width of the seat band should be 1/32-inch to 3/64-inch (0.79 to 1.2 mm) wide. Grind only enough to assure proper seating.

Place each valve in its proper location. Check each valve for a tight seat. Make several marks at regular intervals across the valve face using machinists bluing. Observe if the marks rub off uniformly when the valve is rotated part of a turn against the seat. The valve seat should contact the valve face evenly at all points. The line of contact should be at the center of the valve face.

Valve Guide Replacement

Worn valve stem guides can be replaced from inside the valve chamber (a seal is provided behind the intake valve guides only). The smaller diameter of the tapered valve guides must face toward the valve head. Tappets are also replaceable from the valve chamber after first removing the valve assemblies.

Removal: Before removing valve guides, use an electric drill with a wire brush to remove carbon and other foreign material from top surface of guides. Failure to perform this operation may result in damage to the guide bores. Drive the guides out with a hammer and valve guide driver.

CAUTION ***Driving out old guides can damage the tapped bores. Be careful not to strike bores with driver.***

Installation: Run a small polishing rod with crocus cloth through valve guide holes to clean out carbon and other foreign materials. Place a new gasket on the intake valve guide and coat the outer edge of each new guide with oil. Place guide, notch up, in cylinder block and press in until guide protrudes 11/32-inch (8.7 mm) from rocker box side of block. A suggested method of installation is shown in Figure 61.

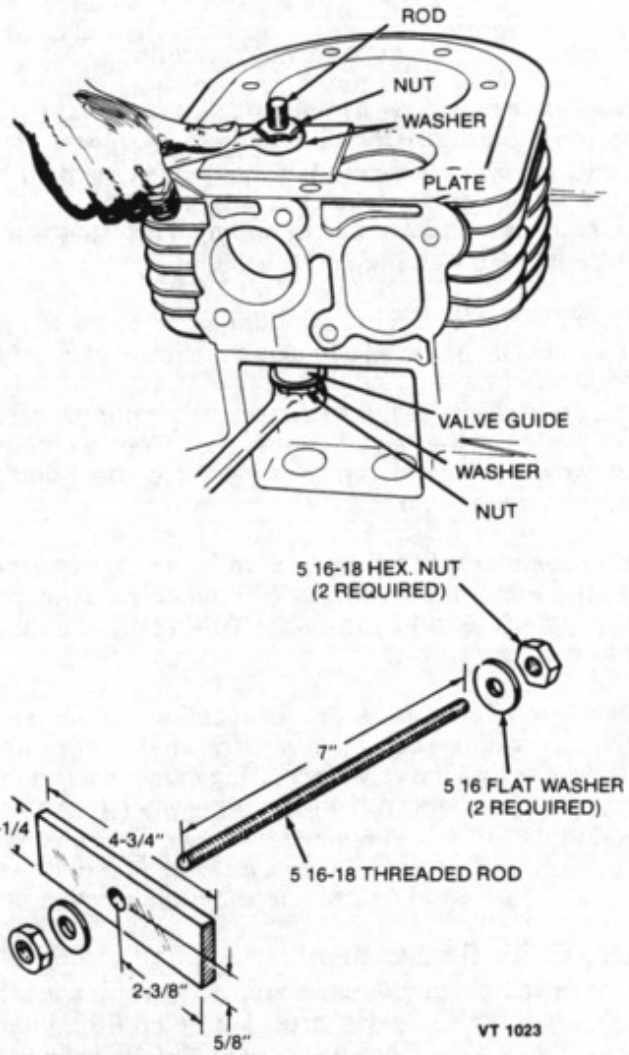

FIGURE 61. VALVE GUIDE INSTALLATION

Valve Seat Replacement

Worn valve seats can be replaced with new valve seat inserts.

Removal: Use a standard 3/4-inch or 1 inch pipe tap (depending on the seat diameter) to remove the valve seat (see Figure 62). Place a small piece of flat steel or a flat washer on the top of the valve guide for the tap to bottom against. Turn the pipe tap in until the seat starts to turn in the seat recess. Continue to turn the tap and pull outward to remove the seat. If the valve guide is pushed downward by the tap, be sure to push it back into the proper position. Because a slight amount of recess metal will be removed by this operation, an oversize replacement seat must be used.

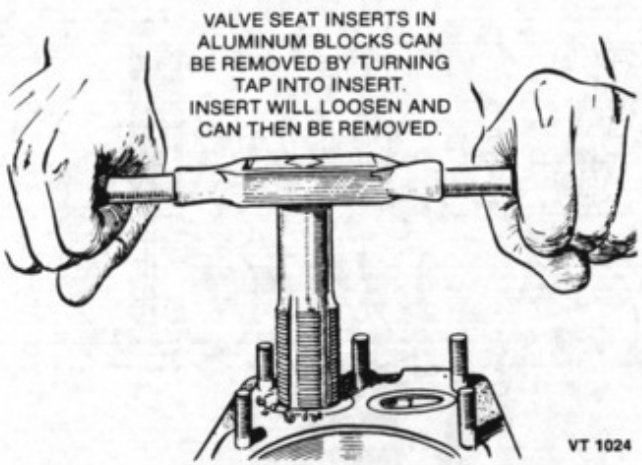

FIGURE 62. REMOVING VALVE SEAT

Replacement: After the old seat has been removed, clean out any carbon or metal burrs from the seat insert recess. The easiest and most accurate method of installation involves slowly heating the cylinder block to 325° F (163° C) and chilling the valve seat insert in dry ice for one-half hour. Use a valve seat insert driver and hammer to install the insert.

CAUTION ***Contact with dry ice might cause personal injury. Do not handle or touch dry ice.***

Insert the pilot of the tool into the valve guide hole in the cylinder block and quickly drive the valve seat insert in so that the insert goes evenly to the bottom of the recess in the cylinder block. Make certain that the valve seat insert rests solidly on the bottom of the recess all the way around its circumference (Figure 63).

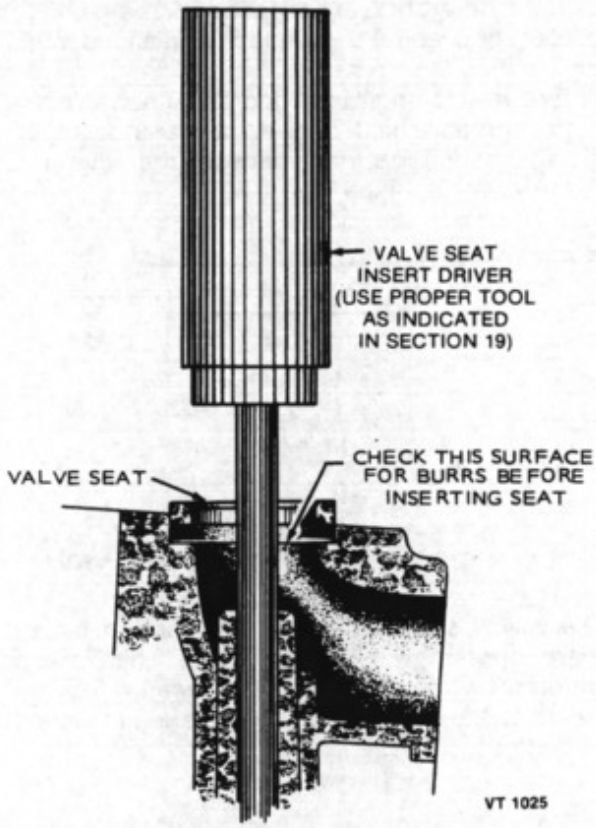

FIGURE 63. INSERTING NEW VALVE SEAT

Tappet Adjustment

The engine is equipped with adjustable valve tappets. Adjust the valve clearance only when engine is at ambient temperature. Proceed as follows.

1. Remove all parts necessary to gain access to valve tappets.
2. Remove spark plugs to make turning the engine easier.
3. Place a socket wrench on the flywheel capscrew and rotate the crankshaft in a clockwise direction until the left intake valve (viewed from flywheel end) opens and closes. Continue turning the crankshaft until the TC mark on the flywheel is lined up with the TC mark on the gear cover. This should place the left piston (#1) at the top of its compression stroke. Verify that the left intake and exhaust valves are closed and there is no pressure on the valve lifters.
4. Clearances are shown in the Specifications section. For each valve, the gauge should just pass between the valve stem and valve tappet (see Figure 64).
5. To correct the valve clearance, turn the adjusting screw as needed to obtain the right clearance. The screw is self-locking.
6. To adjust valves on the right cylinder, turn engine one complete revolution and again line up mark on the flywheel and the TC mark on the gear cover. Then follow adjustment procedure given for left cylinder.
7. Replace all parts removed. Tighten all screws securely. Torque manifold bolts.

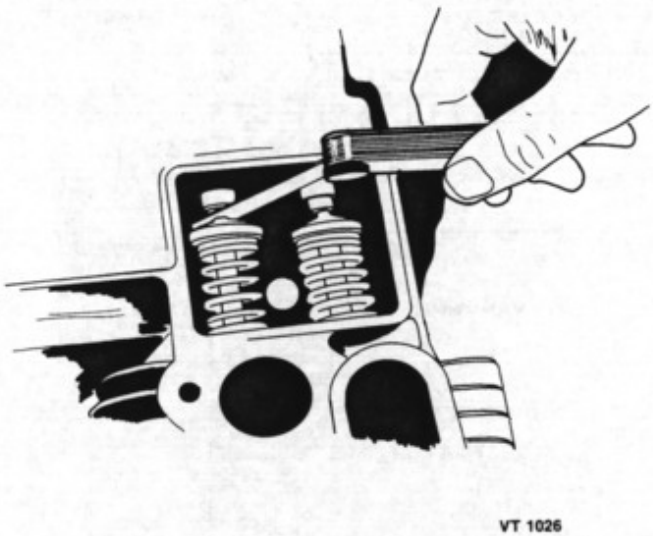

VT 1026

FIGURE 64. VALVE CLEARANCE ADJUSTMENT

GEAR COVER

Remove the flywheel key and gear cover mounting screws. Gently tap the gear cover with a plastic-faced hammer to loosen it (see Figure 65).

When installing the gear cover, make sure that the pin in the gear cover engages the nylon lined (smooth) hole in the governor cup. Turn the governor cup so that the nylon lined hole is at the three o'clock position. Use a small amount of grease to assist in holding governor cup in position. The rounded side of the governor yoke must ride against the governor cup. Turn the governor arm and shaft clockwise as far as possible and hold in this position until the gear cover is installed flush against the crankcase. Be careful not to damage the gear cover oil seal.

Refer to Oil Seals section if replacing the gear cover oil seal.

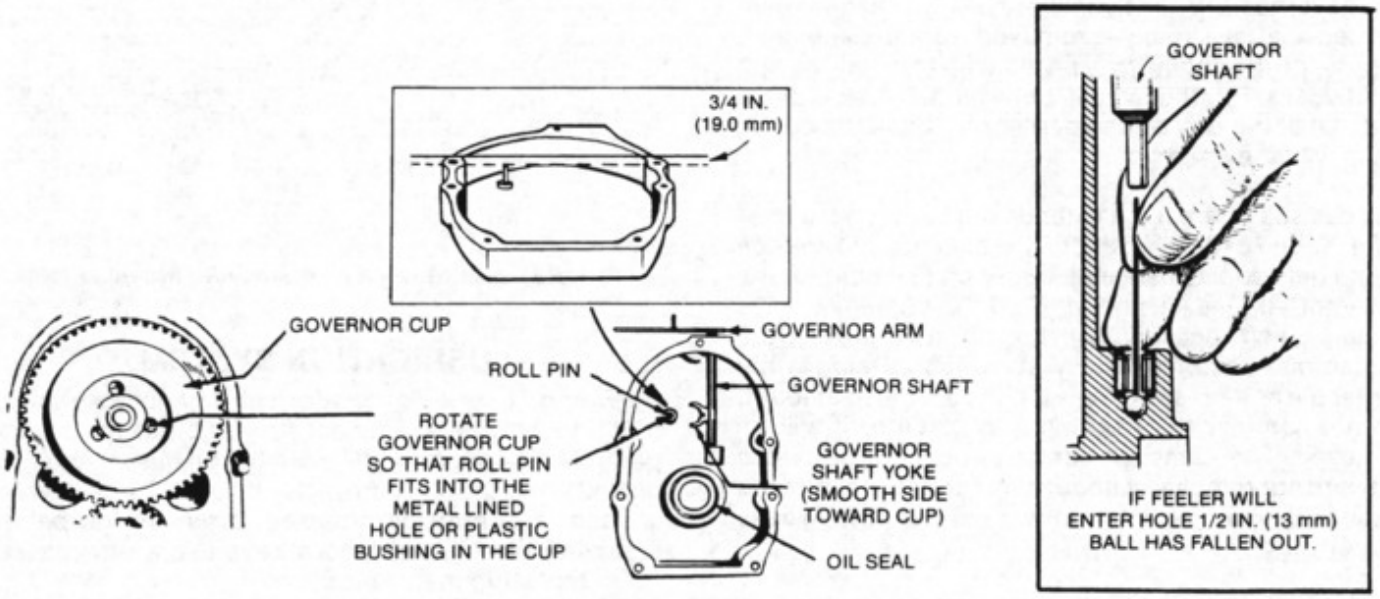

VT 1027

FIGURE 65. GEAR COVER ASSEMBLY

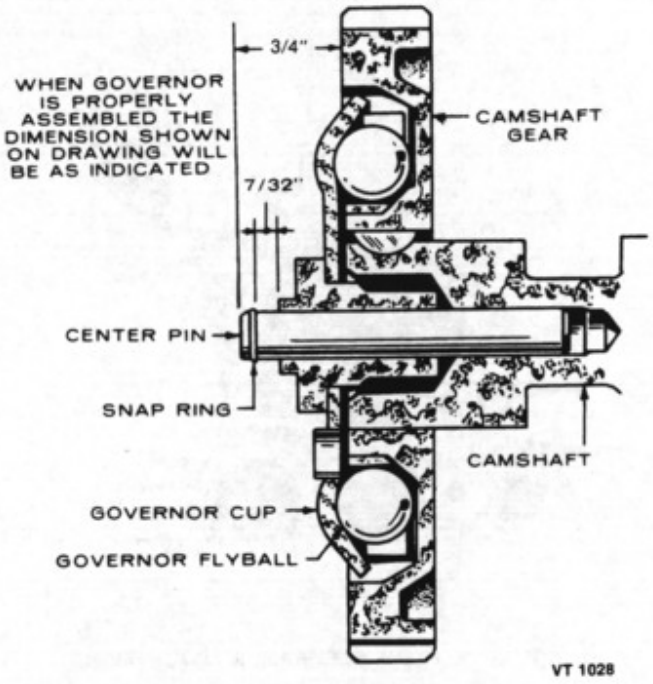

FIGURE 66. GOVERNOR CUP

GOVERNOR CUP

With the gear cover removed, the governor cup can be taken off after removing the snap ring from the camshaft center pin, Figure 66. Catch the flyballs while sliding the cup off.

Replace any flyball that is grooved or has a flat spot. If the arms of the ball spacer are worn or otherwise damaged, remove the spacer by splitting with a chisel. Use a press to install a new spacer on the camshaft gear. The governor cup must spin freely on the camshaft center pin without excessive looseness or wobble. If the race surface of the cup is grooved or rough, replace it with a new one.

The governor cup and flyballs are easily installed when the camshaft assembly is removed from the engine. If necessary, the engine may be tilted up to install the cup and flyballs. Put the flyballs between the spacer arms and install the cup on the center pin. Lock the cup in place with the snap ring.

The camshaft center pin extends out 3/4-inch (19 mm) from the end of the camshaft. This distance provides an in and out travel distance of 7/32-inch (5.6 mm) for the governor cup, as illustrated. Hold the cup against the flyballs when measuring. If the distance is less, the engine may race, especially at no load. Remove the center pin and press in a new pin the specified amount. Do not hammer the new pin into place or it will be damaged. The camshaft center pin cannot be pulled outward nor removed without damage. If the center pin extends out too far, the cup will not hold the flyballs properly.

TIMING GEARS AND CAMSHAFT

If replacement of either the crankshaft gear or the camshaft gear becomes necessary, it is recommended that both gears be replaced.

To remove the crankshaft gear, first remove the snap ring and retainer washer; then attach the gear pulling ring using two No. 10-32 screws (Figure 67). Tighten the screws alternately until both are tight. Attach a gear puller to the puller ring and remove the gear.

The camshaft and gear are removed as an asembly. Before removing the camshaft and gear assembly, remove the cylinder head and valve assemblies. Then remove the operating plunger for the breaker points and tappets.

Each timing gear is stamped with "O" near the edge. The gear teeth must mesh so that these marks exactly coincide when the gears are installed in the engine. When installing the camshaft gear and shaft assembly, be sure that the thrust washer is properly in place behind the camshaft gear. Then install the crankshaft retaining washer and lock ring.

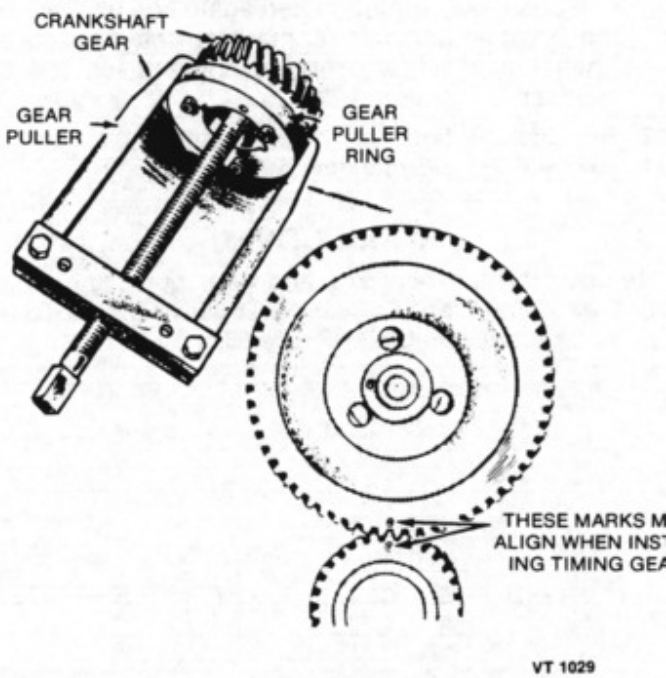

FIGURE 67. TIMING GEAR REMOVAL AND INSTALLATION

LUBRICATION SYSTEM

All B and N series generator set engines use an oil pump to provide a constant flow of oil to the engine parts. The oil supply collects in the oil base where it is picked up by the oil pump pick-up cup. A by-pass valve is used to control oil pressure. Drain the oil before removing the oil base and always use a new gasket when replacing the oil base.

Oil Pump

The oil pump (Figure 68) is mounted on the front of the crankcase behind the gear cover and is driven by the crankshaft gear. The inlet pipe and screen assembly is attached directly to the pump body. A discharge passage in the cover of the pump registers with a drilled passage in the crankcase. Parallel passages distribute oil to the front main bearing, rear main bearing and pressure control bypass valve.

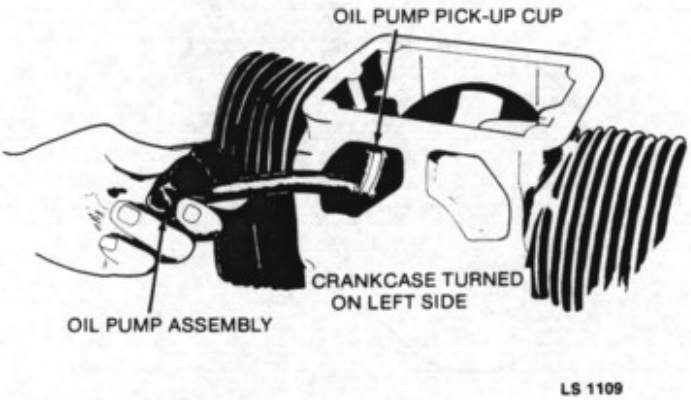

FIGURE 68. OIL PUMP ASSEMBLY

Circumferential grooves in the main bearings supply oil to the connecting rod bearings through drilled passages from each main journal. A drilled passage connects the front main bearing oil supply to the front camshaft bearing. The oil overflow from the bypass valve furnishes lubrication to the camshaft drive gears.

Normal oil pressure should be 30 psi (207 kPa) or higher when the engine is at normal operating temperature. If pressure drops below this value at governed speed, inspect the oil system for faulty components.

Check the oil pump thoroughly for worn parts. Oil the pump to prime it before reinstalling. Except for gaskets and pick-up cup, the component parts of the pump are not available individually. Install a new pump assembly if any parts are worn.

Oil By-Pass Valve

The by-pass valve (located to the right and behind gear cover, Figure 69) controls oil pressure by allowing excess oil to flow directly back to the crankcase. Normally the valve begins to open about 30 psi (207 kPa).

The valve is non-adjustable and normally needs no maintenance. To determine if abnormal (high or low) oil pressure is caused by improper valve operation inspect as follows:

1. Remove 3/8 in. -24 x 1 in. cap screw located behind gear cover and under governor arm.
2. Remove spring and plunger with a magnet tool.

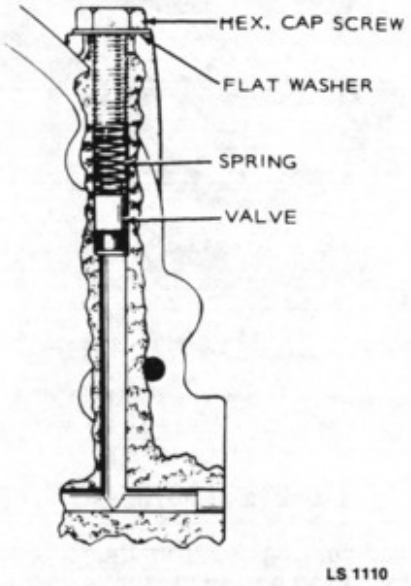

FIGURE 69. OIL BY-PASS VALVE

3. Determine proper valve operation by checking the spring and plunger according to the following measurements.

   Plunger Diameter ..... 0.3365 to 0.3380 in. (8.55 to 8.59 mm)

   Spring
   Free Length ..... 1.00 inch (25.4 mm)
   Load ..... 2.6 ± 0.2 lbs (11.6 ± 0.9N) when compressed to 0.500 inch (12.7 mm)
4. Check the valve seat and clean away any accumulation of metal particles which could cause erratic valve action. Verify that the valve seat is concentric with the larger diameter valve bore.
5. Clean plunger and spring in parts cleaning solvent and install.

PISTON ASSEMBLY

The piston assembly consists of the piston, piston rings, piston pin, connecting rod assembly, and bearing. After removal from the engine, all parts must be carefully inspected for damage and wear before replacing.

Removal And Disassembly

Whenever there is a noticeable wear ridge at the top of each cylinder, remove the ridge before removing the pistons. If not, the rings can catch the ridge when pushing out the pistons and cause a ring land fracture. See Figure 70.

CAUTION ***Forcing the piston from the cylinder before reaming might cause damage to the piston lands and break rings. Remove the wear ridge before removing the piston.***

To remove the piston and connecting rod assemblies, turn the crankshaft until a piston is at the bottom of the stroke. Remove the nuts from the connecting rod bolts.

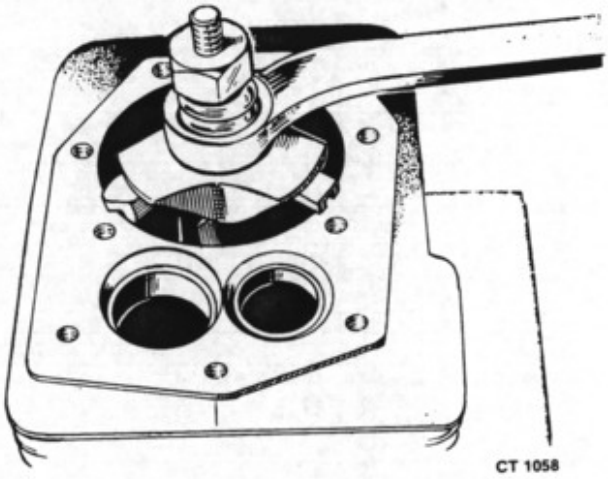

FIGURE 70. REMOVING WEAR RIDGE

Lift the rod bearing cap from the rod and push the rod and piston assembly out the top of the cylinder with the handle end of a hammer. Be careful not to scratch the crankpin or the cylinder wall when removing these parts.

Mark each piston and rod assembly so they can be returned to their respective cylinders after overhaul. Keep connecting rod bearing caps with their respective rods.

The pistons are fitted with two compression rings and one oil control ring. Remove these rings from the piston using a piston ring spreader as shown in Figure 71.

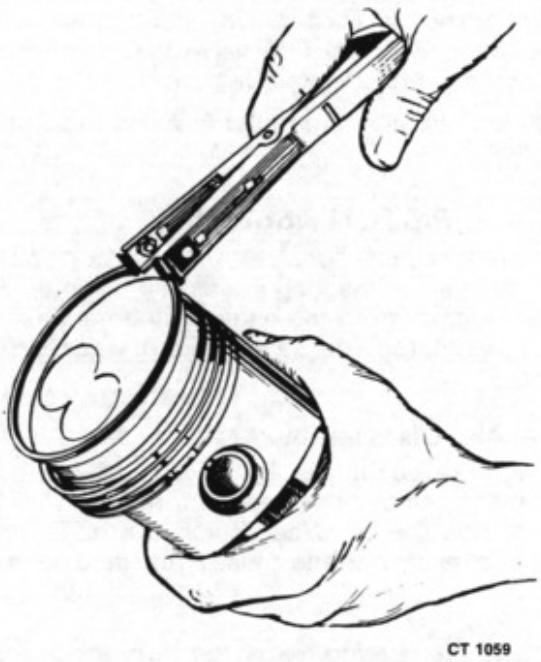

FIGURE 71. REMOVING PISTON RINGS

Mark each piston to make sure the rod will be assembled on the piston from which it was removed. Remove the piston pin retainer from each side and push the pin out.

Remove dirt and deposits from the piston surfaces with an approved cleaning solvent. Clean the piston ring grooves with a groove cleaner or the end of a piston ring filed to a sharp point (Figure 72). Care must be taken not to remove metal from the groove sides.

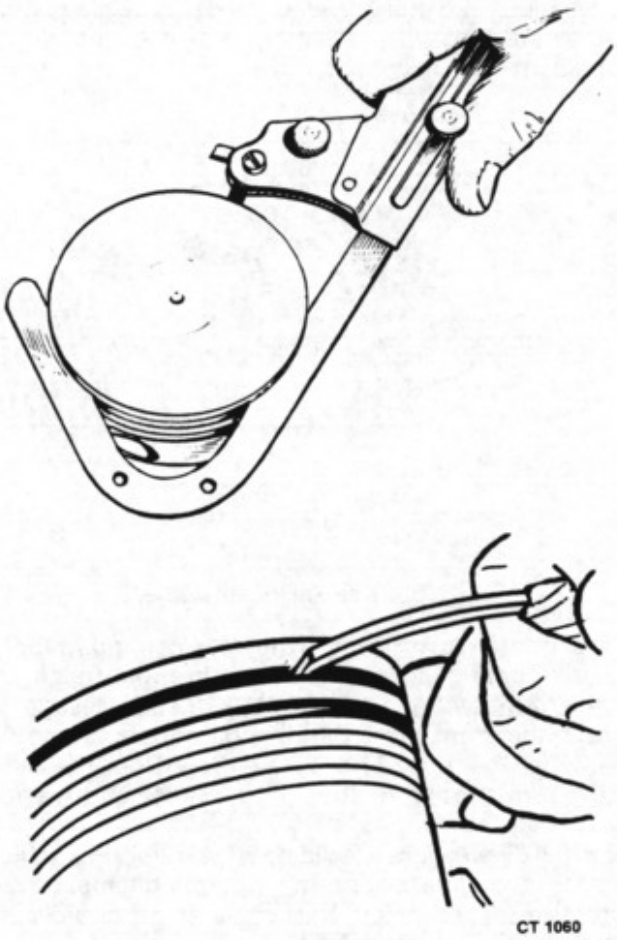

FIGURE 72. CLEANING RING GROOVES

CAUTION ***Using a caustic cleaning solvent or wire brush for cleaning pistons will cause piston damage. Use only parts cleaning solvent.***

When cleaning the connecting rods in solvent, include the rod bore. Blow out all passages with low pressure compressed air.

Inspection

The following covers inspection procedures for pistons and connecting rods.

Piston Inspection: Inspect the pistons for fractures at the ring lands, skirts and pin bosses. Check for wear at the ring lands using a new ring and feeler gauge as shown in Figure 73. Replace the piston when the side clearance of the top compression ring reaches 0.008 inch (0.20 mm).

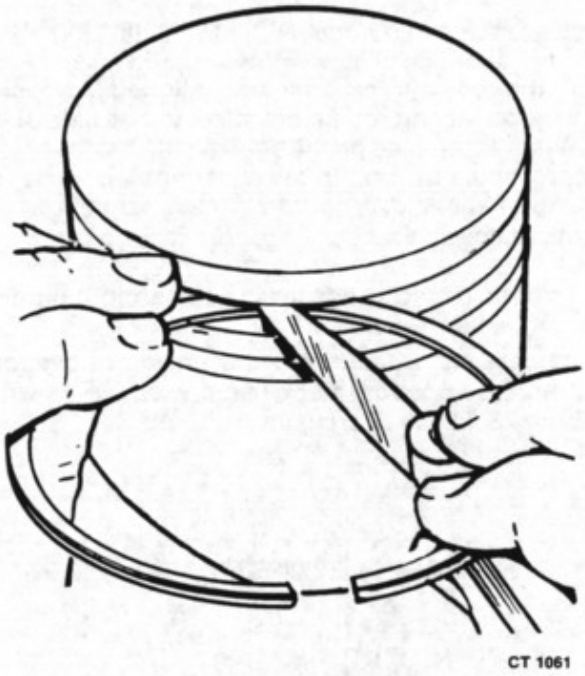

FIGURE 73. CHECKING RING LAND

Improper width rings or excessive ring side clearance can result in ring breakage. New rings in worn ring grooves don't have good cylinder wall contact (Figure 74).

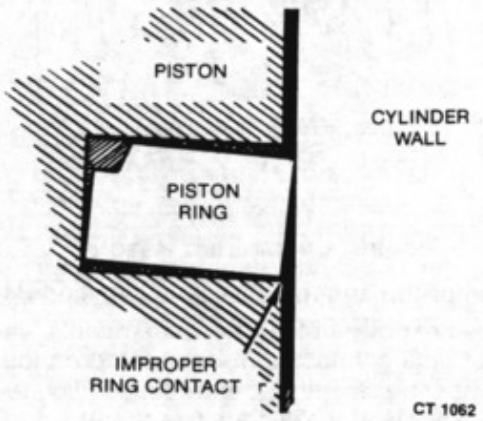

FIGURE 74. NEW RING IN WORN RING GROOVE

Replace pistons showing signs of scuffing, scoring, worn ring lands, fractures or damage from preignition.

Connecting Rod Inspection: Replace connecting rod bolts and nuts with damaged threads. Replace connecting rods with deep nicks, signs of fractures, scored bores or bores out of round more than 0.002 inch (0.05 mm).

Use a new piston pin to check connecting rod for wear. A push fit clearance is required and varies from engine to engine. If a new piston pin falls through a dry rod pin bore as a result of its own weight, replace the rod or bushing as required.

Piston Pin Inspection: Replace piston pins that are cracked, scored, or out of round more than 0.002 inch (0.05 mm).

Bearing Inspection: Inspect bearings for burrs, breaks, pitting and wear. Replace bearing inserts that are scored, have the overlay wiped out, show fatigue failure, or are badly scratched. If bearings appear to be serviceable, check them for proper clearance.

Piston Clearance

Proper piston tolerances must be maintained for satisfactory operation. Use a micrometer to measure the piston diameter at the point shown in Figure 75. When the cylinder bore is measured (see Cylinder Block section), subtract the piston diameter from the cylinder bore diameter to obtain the piston to cylinder wall clearance. Refer to the Dimensions And Clearances section for the recommended piston clearance.

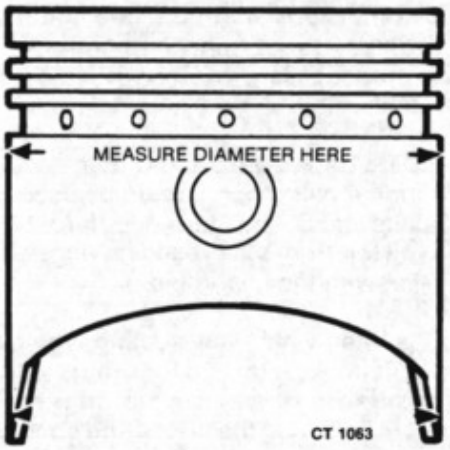

FIGURE 75. PISTON CLEARANCE MEASUREMENT

Fitting Piston Rings

Before installing new rings on the piston, check the ring gap by placing each ring squarely in its cylinder, at a position corresponding to the bottom of its travel (Figure 76). The gap between the ends of the ring is given in Dimensions and Clearances section.

If the ring gap does not meet specifications, verify that the correct replacement ring was obtained for the bore size. Do not file the ring end to increase the end gap.

Standard size rings may be used on 0.005 inch (0.13 mm) oversize pistons. Rings that are 0.010, 0.020, 0.030 and 0.040 inch (0.25, 0.51, 0.76, and 1.02 mm) oversize are to be used on corresponding oversize pistons. Rings of the tapered type are usually marked TOP on one side, or identified in some other manner. Install these rings with the identification mark toward the closed end of the piston.

Engines that have been fitted with 0.005 inch (0.13 mm) oversize pistons at the factory are identified by the letter E after the serial number which is stamped on the cylinder block and on the unit nameplate.

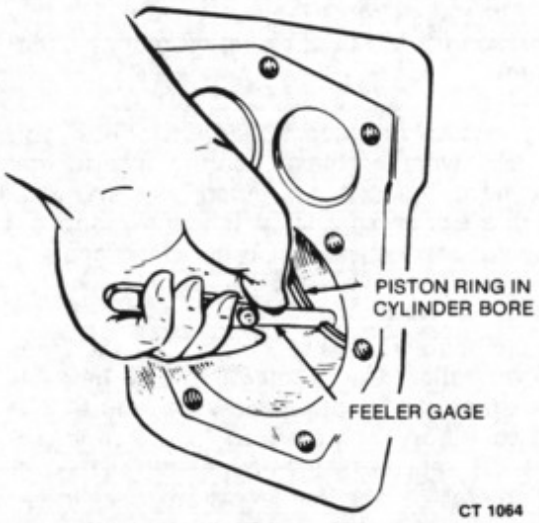

FIGURE 76. CHECKING RING GAP

Piston Assembly Installation

Install rings on pistons starting at the bottom with the oil control ring expander and oil control ring. Use a piston ring spreader to prevent twisting or excessive expansion of the ring.

The two upper grooves are fitted with the compression rings. The moly-coated ring should be used in the top groove. Space each ring gap one-third of the way around the piston from the preceding ring, with no gap directly in line with the piston pin.

The piston is fitted with a full-floating type piston pin. The pin is kept in place by two lock rings in the piston, one at each side. Be sure these lock rings are properly in place before installing the piston and connecting rod in the engine.

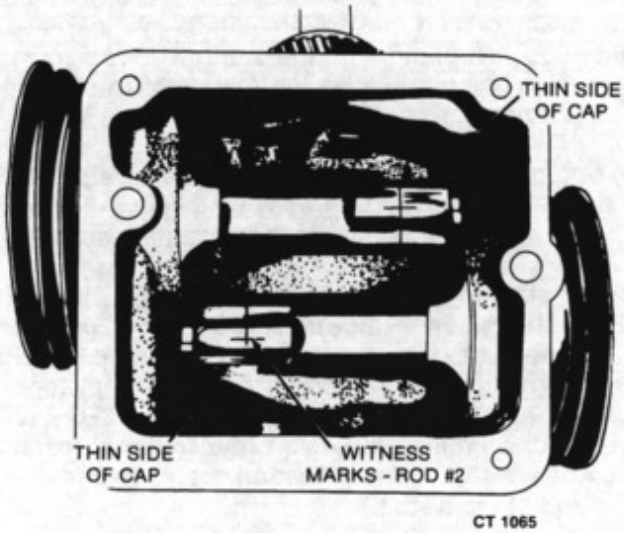

FIGURE 77. ROD CAP ALIGNMENT

Installing Piston In Cylinder: When installing the piston assembly, the raised lines (witness marks - see Figure 77) on the rods and caps must be aligned. Also, note that the connecting rod bolt is offset to one side of the cap. When assembled on the crankshaft, the thin side of the cap should be next to the cylinder block. The rod and cap stamped #2 should be installed next to the bearing plate.

1. Turn crankshaft to position rod bearing journal at bottom if its stroke.
2. Lubricate piston assembly and inside of cylinder. Compress rings with a ring compressor as shown in Figure 78. Install bearing insert in rod.

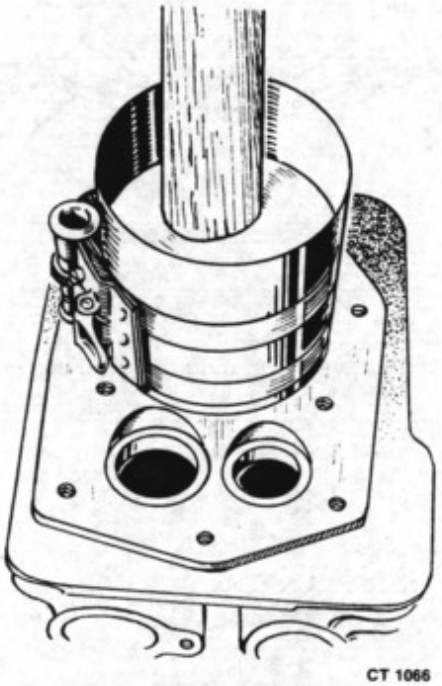

FIGURE 78. INSTALLING PISTON

3. Position piston and rod assembly in cylinder block.
4. Tap piston down into bore with handle end of hammer until connecting rod is seated on journal. Check bearing clearance before proceeding to step #5 (see Rod Bearing Clearance section).
5. Lubricate the rod bearing journal and install the connecting rod cap. Tighten connecting rod bolts to specified torque.

   The bearing cap must be tapped several times to properly align it with the connecting rod. Clearance varies on the journal if this is not done. Install the remaining pistons and rods in the same manner. Crank the engine by hand to se that all bearings are free.

Rod Bearing Clearance

1. Mark all parts so they can be installed in their original positions; and wipe all parts clean of any oil or grease.

2. Place a piece of the correct size Plastigage across the full width of the bearing cap about 1/4-inch (6 mm) off center.
3. Install the bearing cap and tighten to the specified torque. Do not rotate the crankshaft after the cap is in place.
4. Remove the bearing cap and leave the flattened Plastigage on the part to which it adheres. Compare the widest point of the flattened Plastigage with the graduations on the envelope (see Figure 79) to determine the bearing clearance.

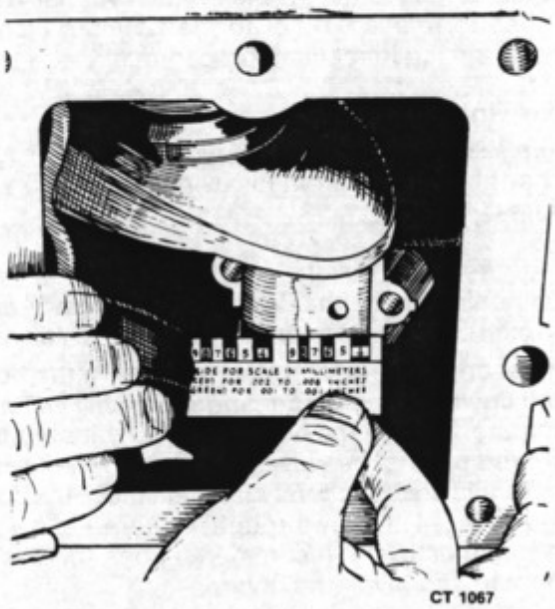

FIGURE 79. MEASURING BEARING CLEARANCE

CRANKSHAFT

To remove the crankshaft, loosen the rear bearing plate screws and remove the bearing plate, gasket, thrust washer, and shims. Turn the crankshaft so the crankthrow is aligned with the notch in the rear opening of the crankcase. Carefully slide the crankshaft out of the crankcase.

Inspection

Inspect the rod and main bearing journals. If they are worn or scored and cannot be smoothed out by polishing, either the journals should be reground to use one of the standard undersize bearings or the crankshaft should be replaced. Remove only as much metal as is required to restore the journal surface while maintaining the recommended bearing clearance.

Whenever making major repairs on the engine, always inspect the drilled passages of the crankshaft. Clean them to remove any foreign material and to assure proper lubrication of the connecting rods.

Installation

Lubricate the front and rear main bearings with engine oil. Use oil or gear lubricant to hold the front thrust washer in place against the engine block. The flat side of the thrust washer goes against the block. Position the crankshaft so the crank throw is aligned with the notch at the rear of the crankcase and install the crankshaft. Make sure the front thrust washer did not slip out of place during installation.

Place the oil seal loader on the oil seal guide and driver and insert into the rear bearing plate. Remove the seal guide and driver leaving the loader in the bearing plate. The loader prevents the seal from being cut on the crankshaft keyway during installation of the rear bearing plate.

Use oil or gear lubricant to hold the shim(s) and rear thrust washer in position on the rear bearing plate (see Figure 83). The shim goes against the bearing plate and the flat surface of the thrust washer goes against the shim.

Place the bearing plate gasket in position on the block, making sure the oil hole on the back of the block is exposed. Install the rear bearing plate and fasten with two nuts (or capscrews) tightened to the specified torque. Make sure the rear thrust washer and shim(s) did not slip out of place during installation. The crankshaft should turn freely by hand.

Checking Endplay

After tightening two rear bearing plate nuts (or capscrews) to the specified torque, check the crankshaft endplay at the point shown in Figure 80 using a feeler gauge. Lightly tap the front of the crankshaft with a plastic-faced hammer to take up the freeplay. Refer to the Dimensions and Clearances section for the recommended crankshaft endplay. If necessary, remove the rear bearing end plate and add or remove shims as required. Install the end plate and tighten all nuts (or capscrews) to the specified torque. Make sure the shim and thrust washer are in place, and recheck crankshaft endplay. Verify that the crankshaft turns freely without binding.

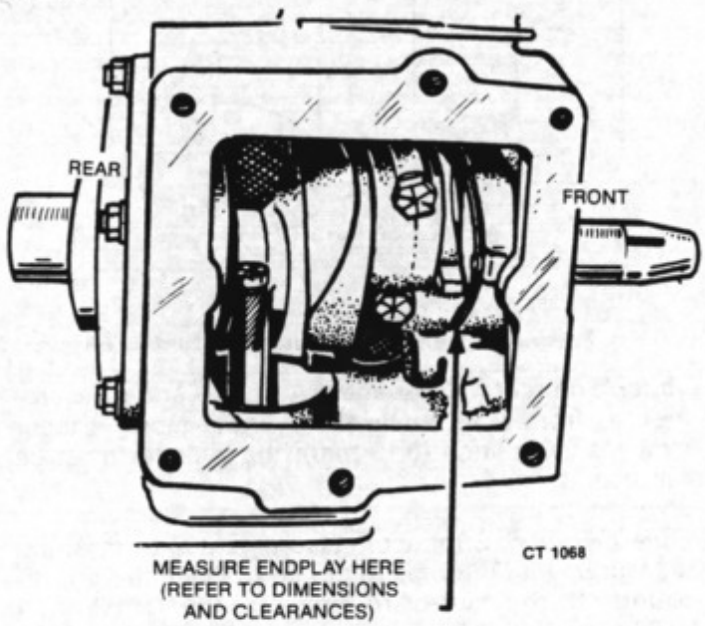

FIGURE 80. CHECKING ENDPLAY

CYLINDER BLOCK

Inspect the cylinder bores for scratches, scoring, and cracks. Verify that the rear welch plug is tight and does not leak. Inspect the block for broken or missing fins that might affect cooling.

Cylinder Measurement

The cylinder bores should be measured for taper, out-of-round, and wear using a telescoping gauge and outside micrometer or an inside micrometer. Measure the cylinder in four places as shown in Figure 81. Measurements A and B are taken on the thrust side of the cylinder, perpendicular to the piston pin. Measurements C and D are taken parallel with the piston pin. Record the measurements for each cylinder.

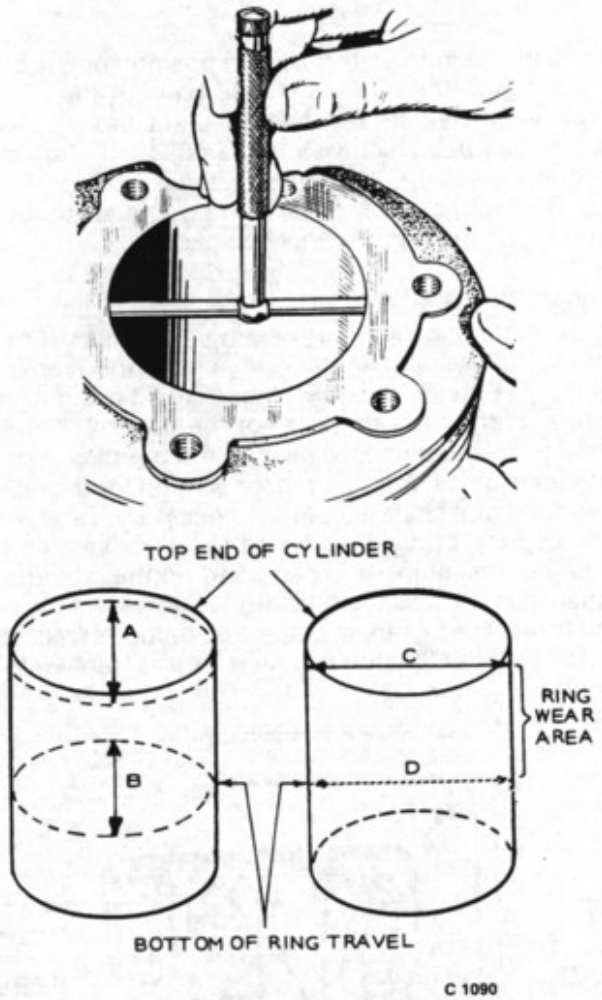

FIGURE 81. MEASURING CYLINDER DIAMETER

Taper: Subtract measurement A from B and measurement C from D to obtain the cylinder taper. If taper exceeds 0.005 inch (0.13 mm), the cylinder must be rebored.

Out-Of-Round: Subtract measurement C from A and measurement D from B to obtain the cylinder out-of-round. If the out-of-round exceeds 0.002 inch (0.05 mm), the cylinder must be rebored.

Wear: Compare measurements A, B, C, and D with the bore size specified in the Dimensions And Clearances section to determine the amount of cylinder wear.

Service And Reconditioning

A cylinder that exceeds the limits for taper or out-of-round or that is worn excessively must be rebored and honed for the next oversize piston. A cylinder that is within the limits for taper and out-of-round and that is not worn excessively may be reconditioned without reboring. If the crosshatch pattern is still visible on the cylinder walls, use a glaze breaker to recondition. If the crosshatch pattern is not visible on the cylinder walls, use a hone to refinish. Refer to the Cylinder Honing section for the recommended procedures.

Cylinder Honing

Cylinders that are within the taper and out-of-round limits can be reconditioned using the following procedures:

1. Anchor the block solidly for either vertical or horizontal honing. Use either a drill press or heavy-duty drill which operates at approximately 250 to 450 rpm.
2. Connect drill to hone and start drill. Move the hone up and down in the cylinder approximately 40 times per minute. Usually the bottom of the cylinder must be worked out first because it is smaller. Then when the cylinder takes a uniform diameter, move the hone up and down all the way through the bore. Follow the hone manufacturer's recommendations for wet or dry honing and oiling the hone.
3. Check the diameter of the cylinder regularly during honing. Use a telescoping gauge and outside micrometer or use an inside micrometer. Measure the bore twice at the top, middle, and bottom with a 90 degree separation between measurements.
4. The crosshatch formed by the scratching of the stones should form an angle of 23 degrees. This can be achieved by moving the hone up and down in the cylinder about 40 times per minute (Figure 82).
5. Clean the cylinder block thoroughly with soap, water and clean rags. Do not use a solvent or gasoline since they wash the oil from the walls but leave the metal particles.
6. Dry the crankcase and coat it with oil.

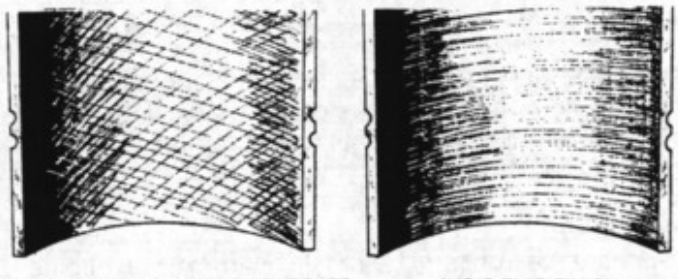

FIGURE 82. CROSS HATCH FINISH

BEARINGS

Removal of the camshaft or crankshaft bearings requires complete disassembly of the engine. Use a combination main and cam bearing removal tool and a hammer to drive out the bearings. Support the casting to avoid distorting or damaging the bearing bores.

Camshaft Bearings

Replacement camshaft bearings are precision type and do not require line reaming or line boring after installation. Coat the bearing with lubricating oil. Position the front bearing so the oil hole in the bearing is aligned with the oil hole (see Figure 83) in the block. Position the rear bearing so the elongated slot is aligned with the breaker point plunger hole in the top of the block.

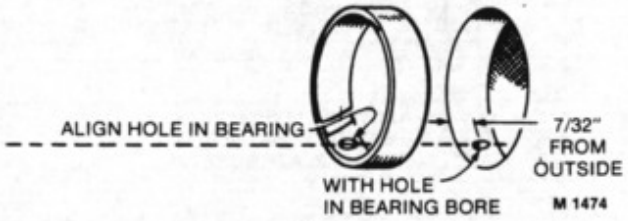

FIGURE 83. CAMSHAFT BEARINGS

Use the combination main and cam bearing driver and a hammer to install the front and rear cam bearings. Drive in the bearings to the depth allowed by the flange on the driver.

Crankshaft Bearings

New crankshaft main bearings are precision type which do not require line reaming or line boring after installation. They are available in standard size, 0.002, 0.010, 0.020, or 0.030 inch (0.05, 0.25, 0.51, or 0.76 mm) undersize.

For putting in either the front or rear main bearing, always align the oil hole(s) in the bearing with the oil hole(s) in the bearing bore. The oil passage must be at least 1/2 open.

Rear Bearing: Use the combination main and cam bearing driver and a hammer to install the rear main bearing. Drive the bearing into the bearing plate from the inner side (see Figure 84) to the depth allowed by the flange on the driver.

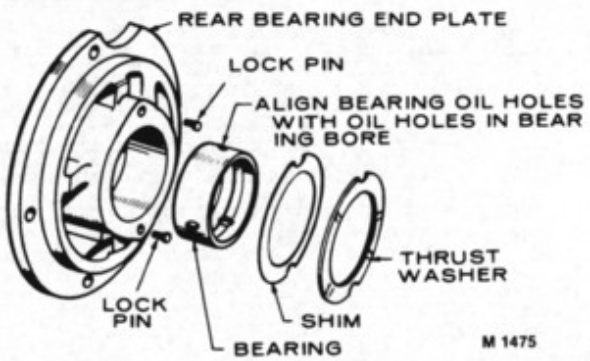

PRECISION TYPE- DO NOT LINE REAM OR BORE

FIGURE 84. REAR BEARING

Front Bearing: Locktite Bearing Mount is used when installing the front bearing. Use the towelette furnished with the bearing kit to clean the outside of the bearing and the bearing bore in the block. Apply the Locktite Bearing Mount to the mating surfaces of the bearing and bearing bore. Allow three to four minutes for drying.

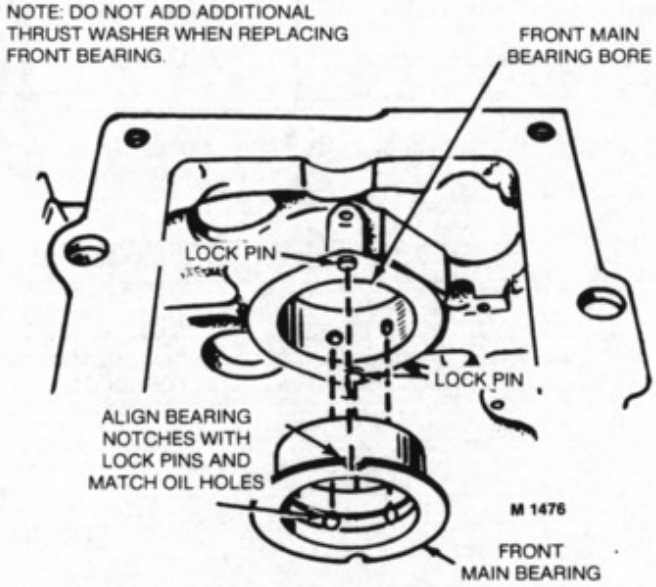

PRECISION TYPE-
DO NOT LINE BORE OR REAM OR BORE

FIGURE 85. FRONT BEARING

WARNING ***Breathing vapor from towelette and prolonged contact with skin can be harmful. Be sure area is well-ventilated.***

Use the combination main and cam bearing driver and a hammer to install the front bearing. Drive in the bearing to the depth allowed by the flange on the driver. Wipe off any excess Locktite and allow one hour for hardening at room temperature.

Engines shipped from the factory have separate thrust washers and main bearings for both front and rear of engine. Front bearing replacement part is a one piece bearing (with attached thrust washer) as shown in Figure 85. Do not add an additional thrust washer to this front bearing.

OIL SEALS

Remove the rear bearing plate to replace the rear oil seal. Remove the gear cover to replace the front oil seal. Use an oil seal remover to pry out the front or rear oil seal.

Use an oil seal guide and driver to press or drive the rear seal into the rear bearing plate until it bottoms against the shoulder of the plate (see Figure 86). Press or drive the front oil seal into the gear cover until it is 0.97 ±0.02 inch (24.6 ± 0.5 mm) from the mounting face of the cover.

Lubricate the lips of the replacement seal with a light coating of grease before installing the rear bearing plate or gear cover. This provides initial lubrication until engine oil reaches the seal. Refer to the Crankshaft section for the rear bearing plate installation procedures. Refer to the Gear Cover section for the gear cover installation procedures.

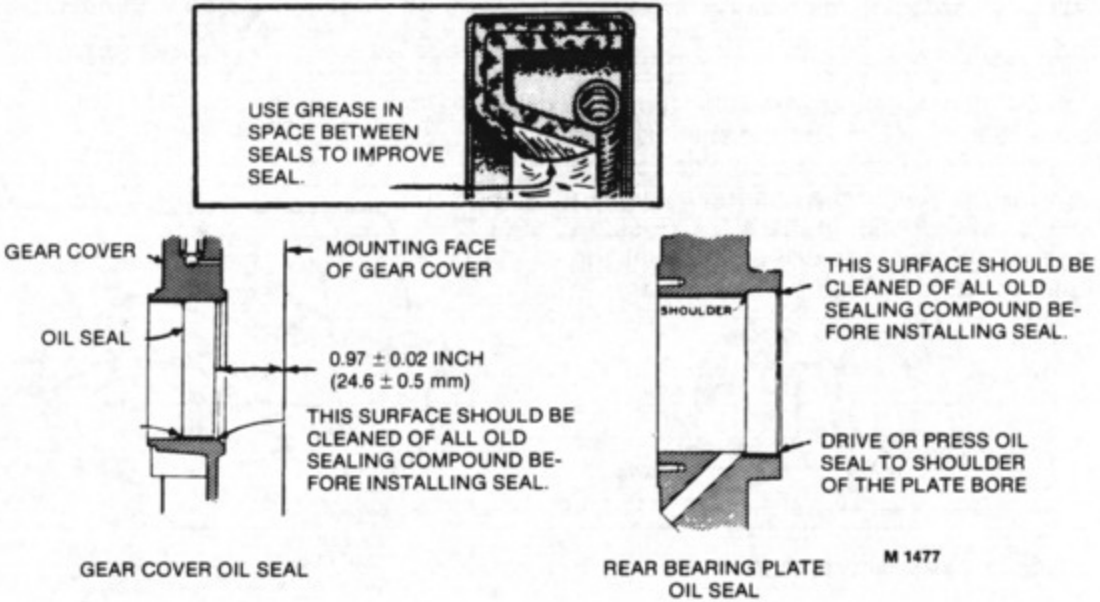

FIGURE 86. OIL SEALS

Service Checklist

After servicing, inspect and test the complete installation to confirm that the generator set will operate properly and will pull full rated load. Check each of the following areas before putting the set into service.

MOUNTING

Examine all mounting bolts and supporting members to verify that the generator set is properly mounted. All fasteners should be tightened securely to prevent them from working loose when subjected to vibration.

Vibration Mounts

The vibration mounts must be assembled properly or the set will vibrate excessively. Refer to Figure 87 for the correct assembly sequence.

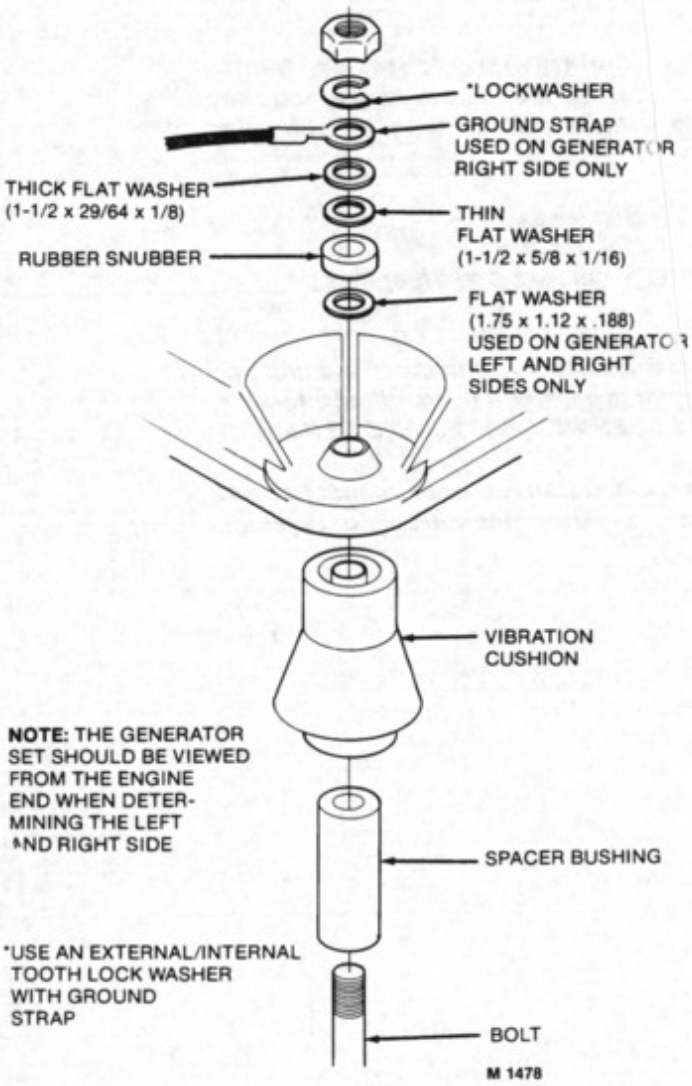

FIGURE 87. VIBRATION MOUNT

CAUTION ***Installing vibration isolator hardware in the wrong sequence will cause the generator set to vibrate excessively and might damage the mounts. Follow proper installation sequence.***

LUBRICATION

If the engine oil was drained, fill the crankcase with oil of the recommended classification and viscosity. Refer to the appropriate Operators Manual for the specific recommendations and procedures.

WIRING

Verify that all wiring connections are tight and hooked up properly. Check each of the following:

- Load Wires
- Control Wires
- Ground Strap
- Battery Cables

INITIAL START ADJUSTMENTS

Adjust the carburetor idle and adjustment screw and main adjustment screw as specified in the Fuel System section to allow starting.

Start the set and immediately adjust the governor speed adjustment nut to obtain a safe no-load operating speed (127 volts at 61 Hertz). With no load applied, listen for any unusual sounds or vibrations. When the choke is completely open, adjust the carburetor and governor as specified in the Fuel System section.

OUTPUT CHECK

Apply a full load to verify that the set will produce its full rated output. Use a load test panel to apply a progressively greater load until full load is reached.

EXHAUST SYSTEM

With the generator set operating, inspect the entire exhaust system including the exhaust manifold, muffler, and exhaust pipe. Visually and audibly check for leaks at all connections, welds, gaskets, and joints and also make sure that exhaust pipes are not heating surrounding areas excessively. If leaks are detected, correct immediately.

WARNING ***Inhalation of exhaust gases might result in serious personal injury or death. Inspect exhaust system audibly and visually for leaks daily. Repair leaks immediately.***

FUEL SYSTEM

With the generator set operating, inspect the fuel supply lines, return lines, filters, and fittings for leaks. Check any flexible sections for cuts, cracks and abrasions and make sure they are not rubbing against anything that could cause breakage.

CAUTION ***Leaking fuel will create a fire hazard which might result in severe personal injury or death if ignited by a spark. If leaks are detected, correct immediately.***

CONTROL

Stop and start the generator set several times at the set control and remote control to verify that the control functions properly.

MECHANICAL

Stop the generator set and inspect for leaking gaskets, loose fasteners, damaged components, or interference problems. Repair as required. Inspect the generator set compartment and verify that there are no breaks or openings in the vapor-proof wall that separates the compartment from the coach interior. Seal openings as required. Make sure all soundproofing material is in place.

⚠WARNING

EXHAUST GAS IS DEADLY!

Exhaust gases contain carbon monoxide, an odorless and colorless gas formed during the combustion of hydrocarbon fuels. Carbon monoxide is poisonous and can cause unconsciousness and death. Symptoms of carbon monoxide poisoning are the following:

- ***Inability to Think Coherently***
- ***Vomiting***
- ***Muscular Twitching***
- ***Throbbing in Temples***
- ***Dizziness***
- ***Headache***
- ***Weakness and Sleepiness***

If you or anyone else experience any of these symptoms, shut down the unit and get out into the fresh air immediately. If symptoms persist, seek medical attention. DO NOT OPERATE THE UNIT UNTIL IT HAS BEEN INSPECTED AND REPAIRED.

The best protection against carbon monoxide inhalation is proper installation and regular, frequent visual and audible inspections of the complete exhaust system.

Onan Corporation
1400 73rd Avenue N.E.
Minneapolis, MN 55432
1-800-888-ONAN
612-574-5000 International Use
Telex: 275477
Fax: 612-574-8087

Onan is a registered trademark of Onan Corporation